evaya

ev80

technical drawings

EV80 Specifications

Standard Colour Range

- Matt Black
- Black
- Bronze
- Dark Silver
- Graphite
- Monument
- Shale Grey
- Silver
- Surfmist
- White Matt

evaya ev80

EV80	FEATURE
5400	Maximum Width (mm)
650	Minimum Width (mm)
5400	Maximum Height (mm)
16	Maximum Square Area (mt)
✓	Motor Operation
×	Manual Operation
180°	Tilting Range
✓	Room Darkening
×	Blockout
×	Noise Suppression Keder on Slat Edge
✓	Side Channel Guidance
✓	Wire Cable Guidance
✓	Rolled Edge Slat
×	Hagofix Slat Support
✓	Ladderbraid Slat Support

evaya
03) 5986 2183
sales@evaya.com.au
evaya.com.au

evaya

Corrosivity in Australia as defined in AS/NZS 2312.2 and described in AS 4312

Product Guidelines

Category		Generic examples	Specific examples	ev80	ev93d
CX	Severe surf shore-line	Surf beach shoreline regions with very high salt deposition.	Some Newcastle beaches	Wire Guides	Not recommended
C5	Surf Sea-shore	Within 200 m of rough seas & surf beaches. May be extended inland by prevailing winds & local conditions.	More than 500 m from the coast in some areas of Newcastle	Wire guides or side channels with coastal pins	Not recommended
C4	Calm Sea-shore	From 200 m to 1 km inland in areas with rough seas & surf. May be extended inland by prevailing winds & local conditions. From the shoreline to 50 m inland around sheltered bays. In the immediate vicinity of calm salt water such as harbour foreshores.	All coasts	Wire guides or side channels with coastal pins	Not recommended
C3	Coastal	From 1 km to 10 km inland along ocean front areas with breaking surf & significant salt spray. May be extended inland to 50 km by prevailing winds & local conditions. From 100 m to 3 – 6 km inland for a less sheltered bay or gulf. From 50 m to 1 km inland around sheltered bays.	Metro areas of Perth, Wollongong, Sydney, Brisbane, Newcastle, & the Gold Coast Adelaide & environs Port Philip Bay & in urban & industrial areas with low pollution levels	Wire guides or side channels with coastal pins	Wire guides or side channels with coastal pins
C2	Arid/Urban Inland	Most areas of Australia at least 50 kilometres from the coast. Inland 3 – 6 km for a less sheltered bay or gulf. Can extend to within 1 km from quiet, sheltered seas.	Canberra, Ballarat, Toowoomba & Alice Springs Adelaide & environs Suburbs of Brisbane, Melbourne, Hobart	Wire guides and side channels with urban pins	Wire guides and side channels with urban pins
C1	Dry indoors	Inside heated or air conditioned buildings with clean atmospheres.	Commercial buildings	Wire guides and side channels with urban pins	Wire guides and side channels with urban pins

***** Product guidelines represent Evaya recommendations. Please contact our office for further clarity.***

***** Consideration of access must be consdidered for ongoing service and maintenance.***

evaya

BEAUFORT SCALE CHART:

SCALE FORCE	WIND	SPEED	EFFECTS ON LAND
0	Calm	Less than 1.6 kmh	Smoke rises vertically.
1	Light air	1.6 - 4.8 km/h	Direction shown by drift of smoke
2	Light breeze	6.4 - 11.3 km/h	Wind felt on face. Leaves rustle. Wind vane moves
3	Gentle breeze	12.9 - 19.3 km/h	Leaves and twigs move. Wind extends a light flag.
4	Moderate breeze	20.9 - 29 km/h	Raises dust and loose paper. Moves small branches.
5	Fresh breeze	30.6 - 38.6 km/hr	Small trees begin to sway.
6	Strong breeze	40.2 - 50 km/h	Large branches move. Telephone wires whistle.
7	Moderate gale	51.5 - 61.6 km	Whole trees sway. Difficult to walk against wind.
8	Fresh gale	62.8 - 74 km/h	Twigs snap off. Walking against wind very difficult.
9	Strong gale	75.6 - 86.9 km/h	Chimney pots and slates removed.
10	Whole gale	88.5 - 101.4 km/h	Trees uprooted. Much damage to buildings
11	Storm	103 - 115.8 km/h	Widespread damage.
12	Hurricane	Over 117.5 km/h	Countryside devastated. Enormous damage.

TABLE PARAMETERS:

MATERIAL: 80mm SLAT
SLAT EDGE: 4mm DIAMETER
GUIDANCE TYPE: GUIDE PINS IN CHANNELS
BLIND HEIGHT: UP TO 2400 MM
BLIND HEIGHT: GREATER THAN 2400 MM. TABLE MINUS 1

	DISTANCE OF FIXATION FROM FAÇADE			
BLIND WIDTH	< 100 mm	>100 mm <300 mm	>300 mm <500 mm	>500 mm
UP TO 1500 MM	7	6	5	CHART IS INVALID
UP TO 2000 MM	7	6	5	
UP TO 2500 MM	7	6	5	
UP TO 3000 MM	7	6	5	
UP TO 3500 MM	6	5	4	
UP TO 4000 MM	6	5	4	
UP TO 4500 MM	6	5	4	
UP TO 5000 MM	6	5	4	

TABLE PARAMETERS:

MATERIAL: 80mm SLAT
SLAT EDGE: 4mm DIAMETER
GUIDANCE TYPE: WIRE GUIDE
BLIND HEIGHT: UP TO 2400 MM
BLIND HEIGHT: GREATER THAN 2400 MM. TABLE MINUS 1

	DISTANCE OF FIXATION FROM FAÇADE			
BLIND WIDTH	< 100 mm	>100 mm <300 mm	>300 mm <500 mm	>500 mm
UP TO 1500 MM	7	6	5	CHART IS INVALID
UP TO 2000 MM	7	6	5	
UP TO 2500 MM	6	5	4	
UP TO 3000 MM	6	5	4	
UP TO 3500 MM	6	5	4	
UP TO 4000 MM	6	5	4	
UP TO 4500 MM	6	5	4	
UP TO 5000 MM	5	4	3	

evaya

1.1 - EV80 Type 1

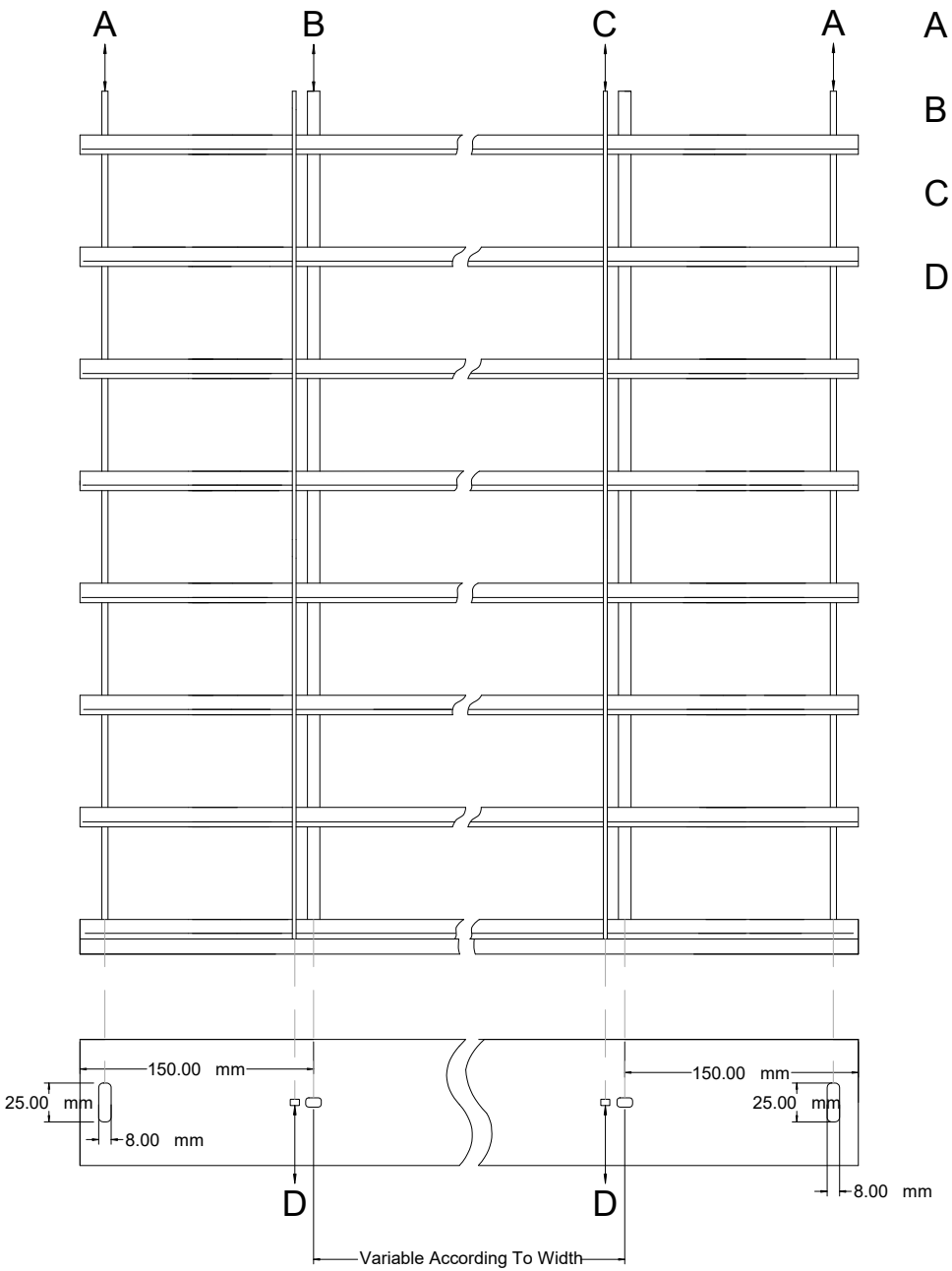

A - 316 STAINLESS STEEL WIRE ROPE UV COATED 4.0mm DIAMETER

B - TEXBAND LIFT TAPE

C - KEVLAR REINFORCED ARAMID LADDER BRAID

D - OMEGA LADDER LOCKING POINT**

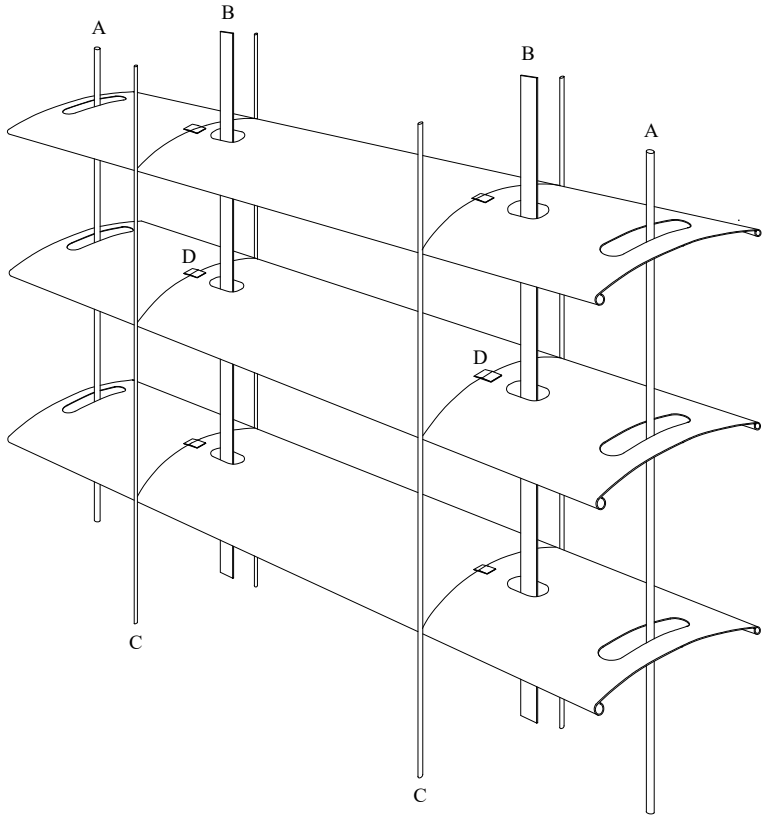

evaya

1.2 - EV80 Type 2

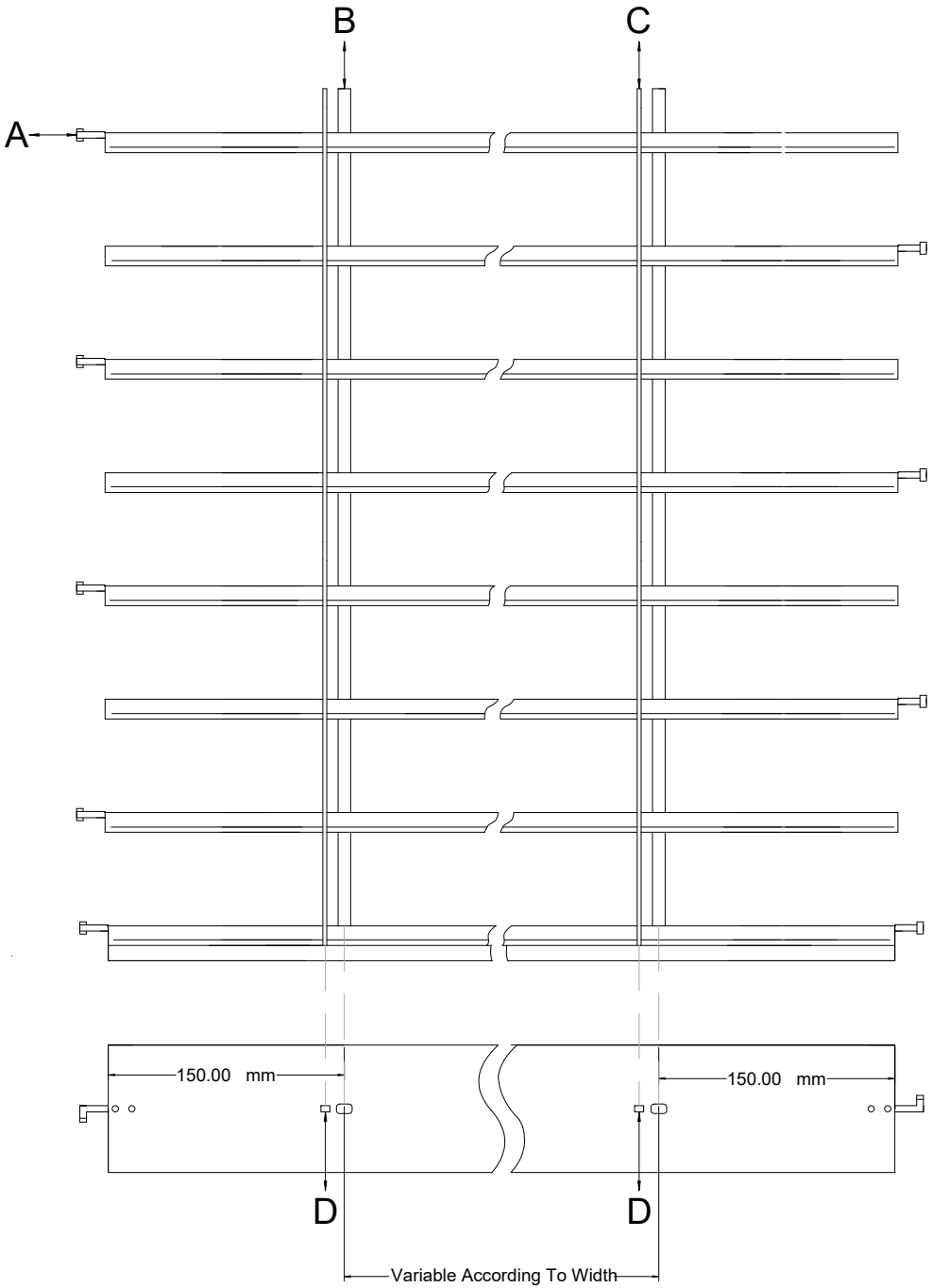

A - ALTERNATING SLAT PINS FOR CHANNEL GUIDES

B - TEXBAND LIFT TAPE

C - KEVLAR REINFORCED ARAMID LADDER BRAID

D - OMEGA LADDER LOCKING POINT

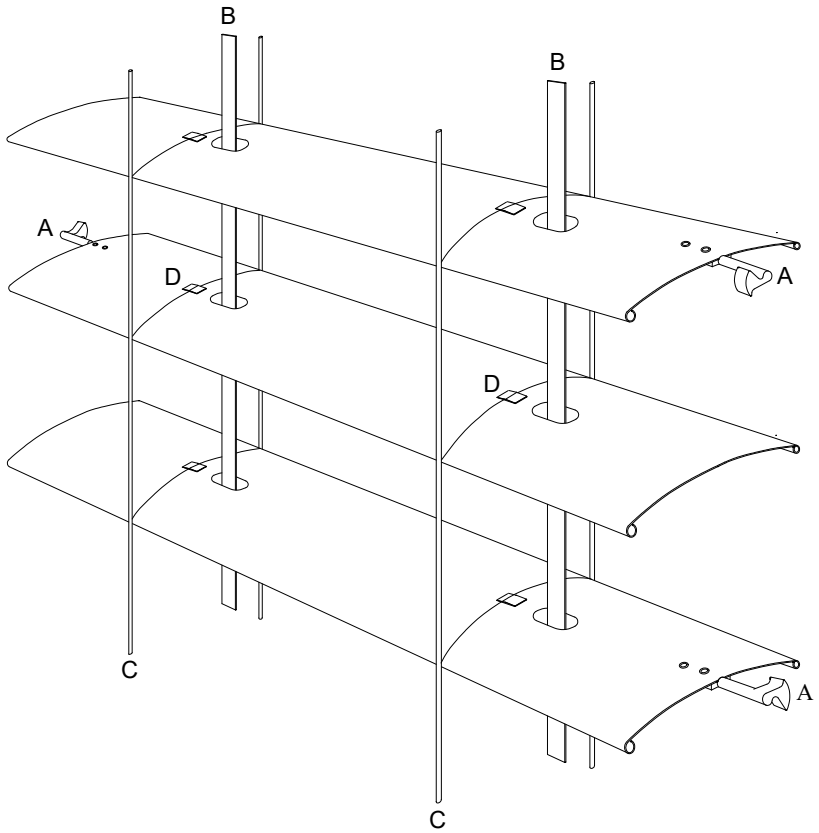

evaya

1.3 - EV80 Type 3

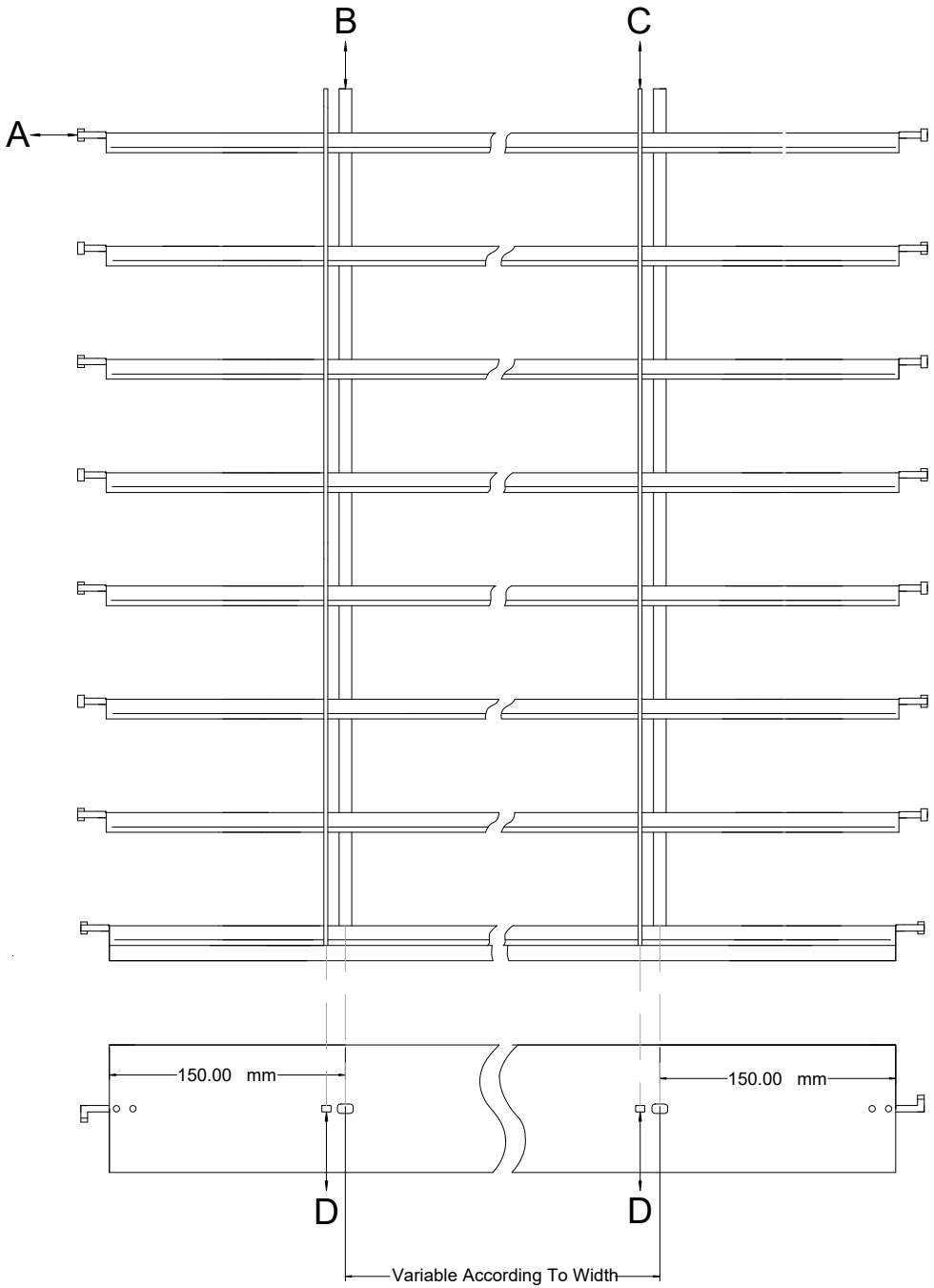

A - DOUBLE SLAT PINS LEFT & RIGHT FOR CHANNEL GUIDES

B - TEXBAND LIFT TAPE

C - KEVLAR REINFORCED ARAMID LIFT TAPE

D - OMEGA LADDER LOCKING POINT

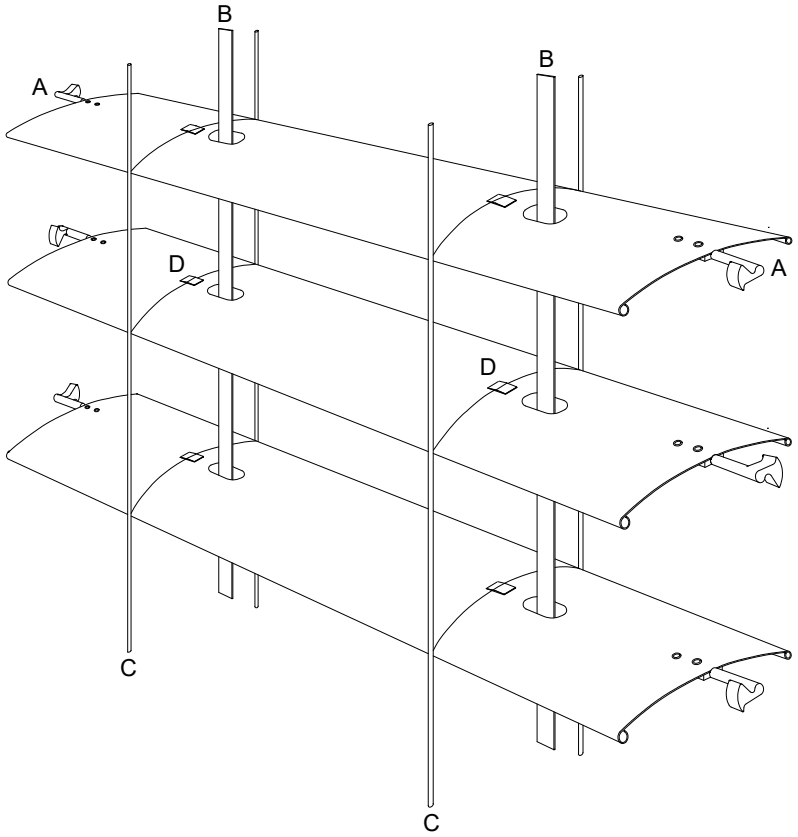

evaya

1.4 - EV80 Type 4

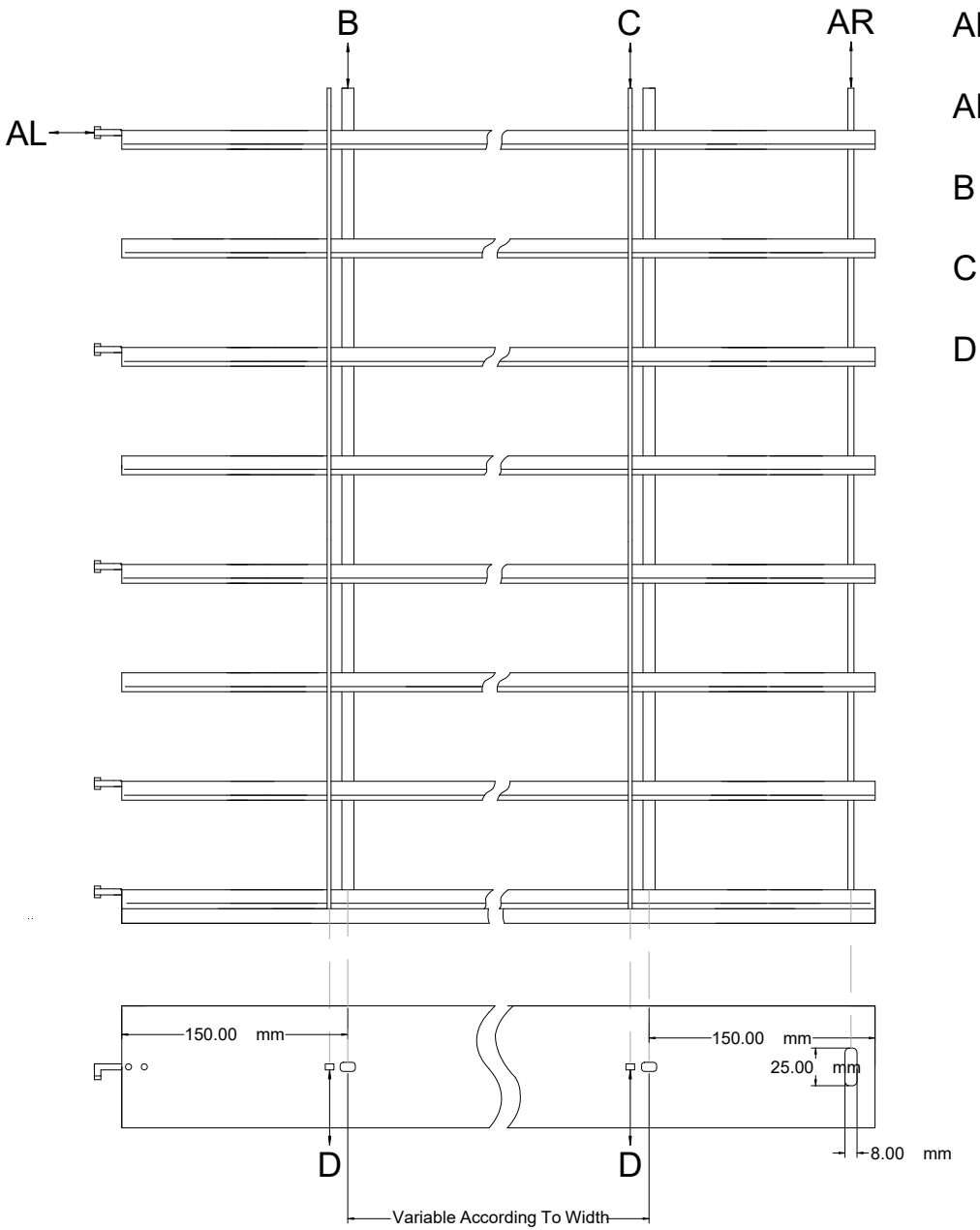

AL - SLAT PIN FOR CHANNEL GUIDE

AR - 316 STAINLESS STEEL WIRE ROPE UV COATED 4.0mm DIAMETER

B - TEXBAND LIFT TAPE

C - KEVLAR REINFORCED ARAMID LADDER BRAID

D - OMEGA LADDER LOCKING POINT

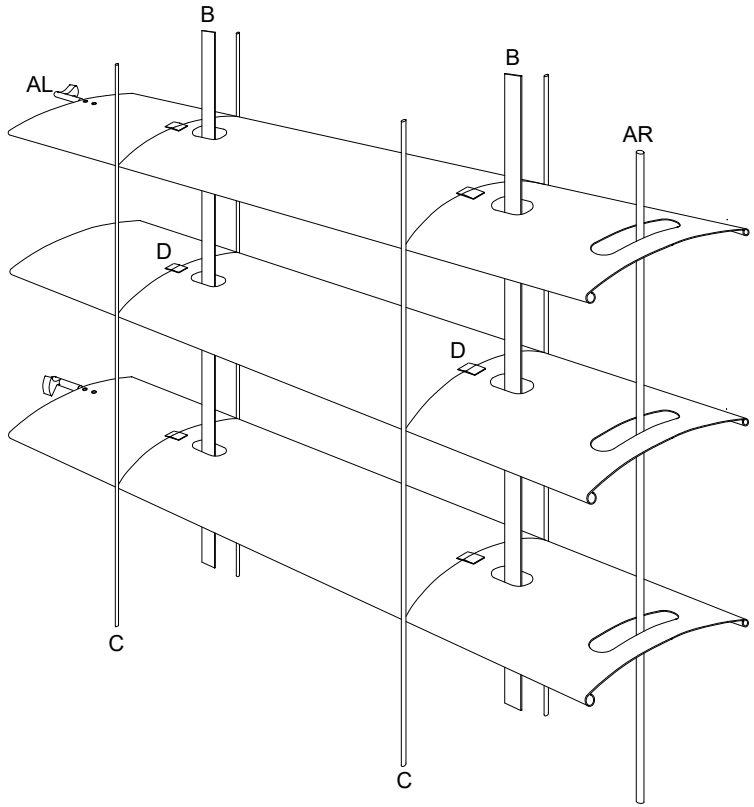

evaya

1.5 - EV80 Type 5

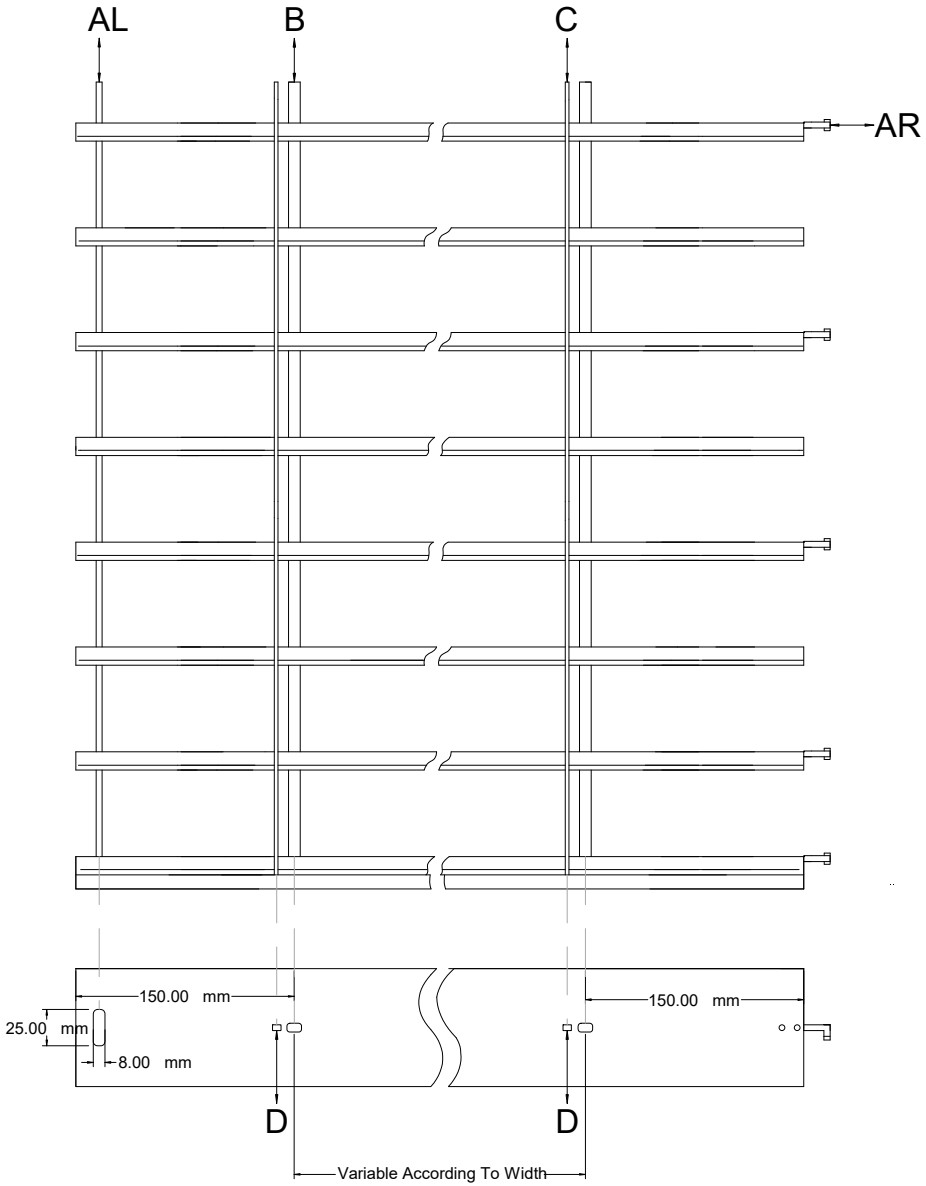

AL - 316 STAINLESS STEEL WIRE ROPE UV COATED 4.0mm DIAMETER

AR - SLAT PIN FOR CHANNEL GUIDE

B - TEXBAND LIFT TAPE

C - KEVLAR REINFORCED ARAMID LADDER BRAID

D - OMEGA LADDER LOCKING POINT

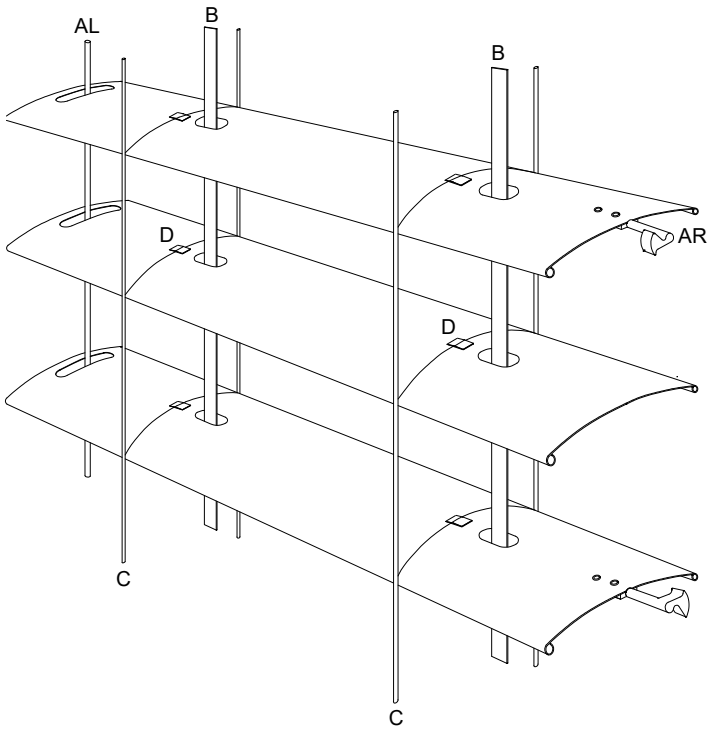

evaya

1.6 - EV80 Type 6 Shroud System

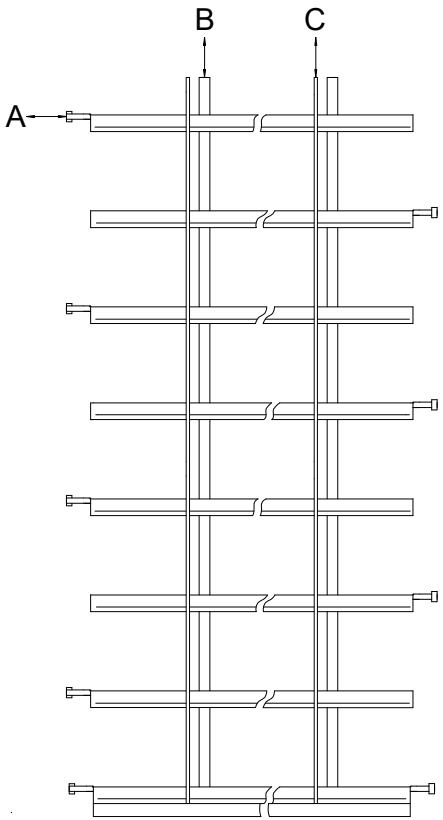

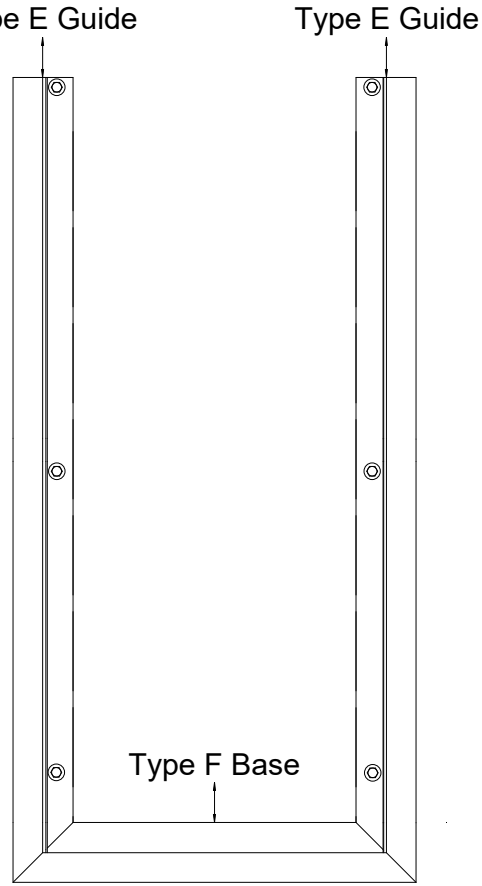

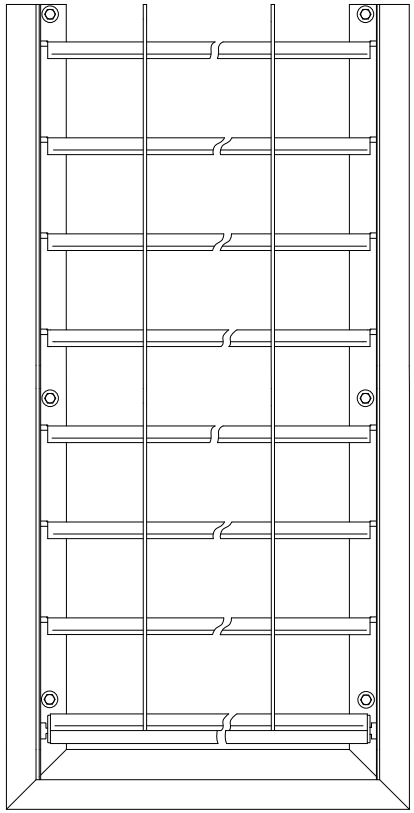

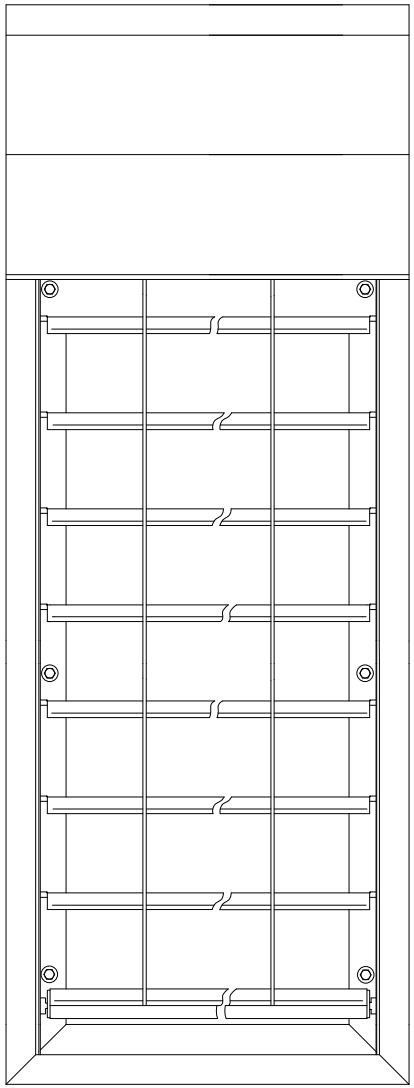

A - ALTERNATING SLAT PINS FOR CHANNEL GUIDE

B - TEXBAND LIFT TAPE

C - KEVLAR REINFORCED ARAMID LADDER BRAID

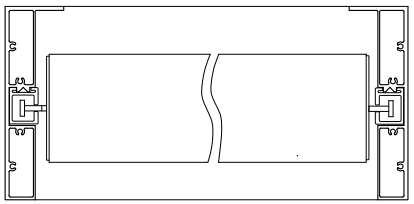

evaya

1.7 EV80 Guide Types - Overview

CHANNEL TYPE G

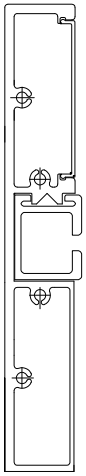

CHANNEL TYPE E

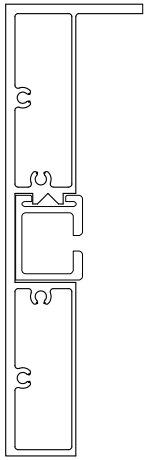

CHANNEL TYPE C

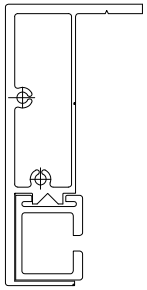

CHANNEL TYPE D2

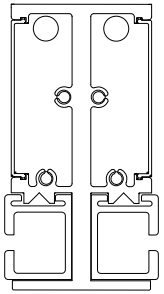

CHANNEL TYPE D

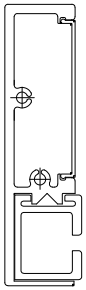

CHANNEL TYPE B

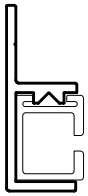

CHANNEL TYPE A2

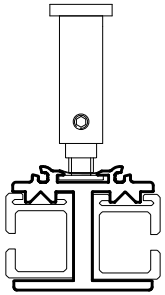

CHANNEL TYPE A

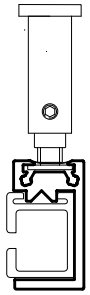

WIRE GUIDE CONCRETE PLATE

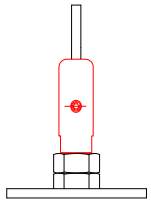

WIRE GUIDE SIDE FIX STANDOFF

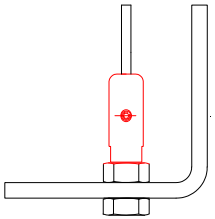

WIRE GUIDE STANDOFF 90MM PROJECTION

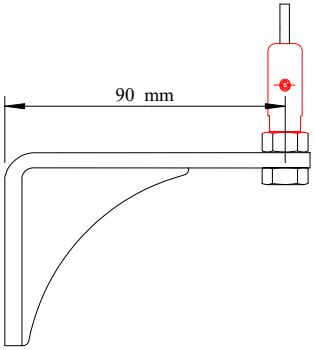

WIRE GUIDE STANDOFF 155MM PROJECTION

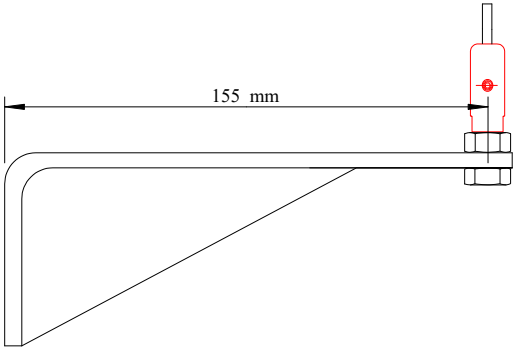

WIRE GUIDE STANDOFF 235MM PROJECTION

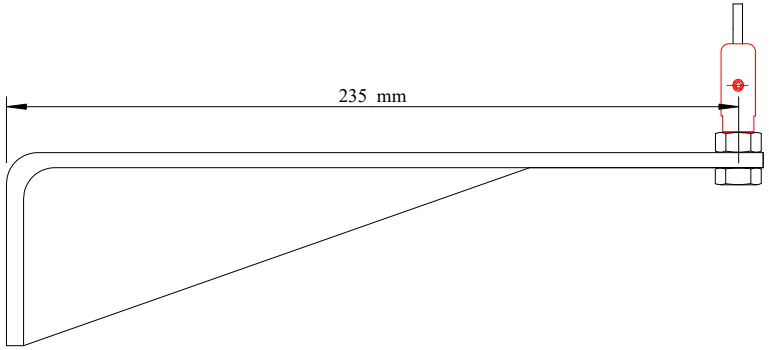

** All channels are configured with solid PVC inner guide inserts

Dimension for all guides can be found within the technical drawing pages

Evaya Wire Tensioner - Electro Polished 304 Stainless Steel

2.0 EV80 Wire Guide with side fix

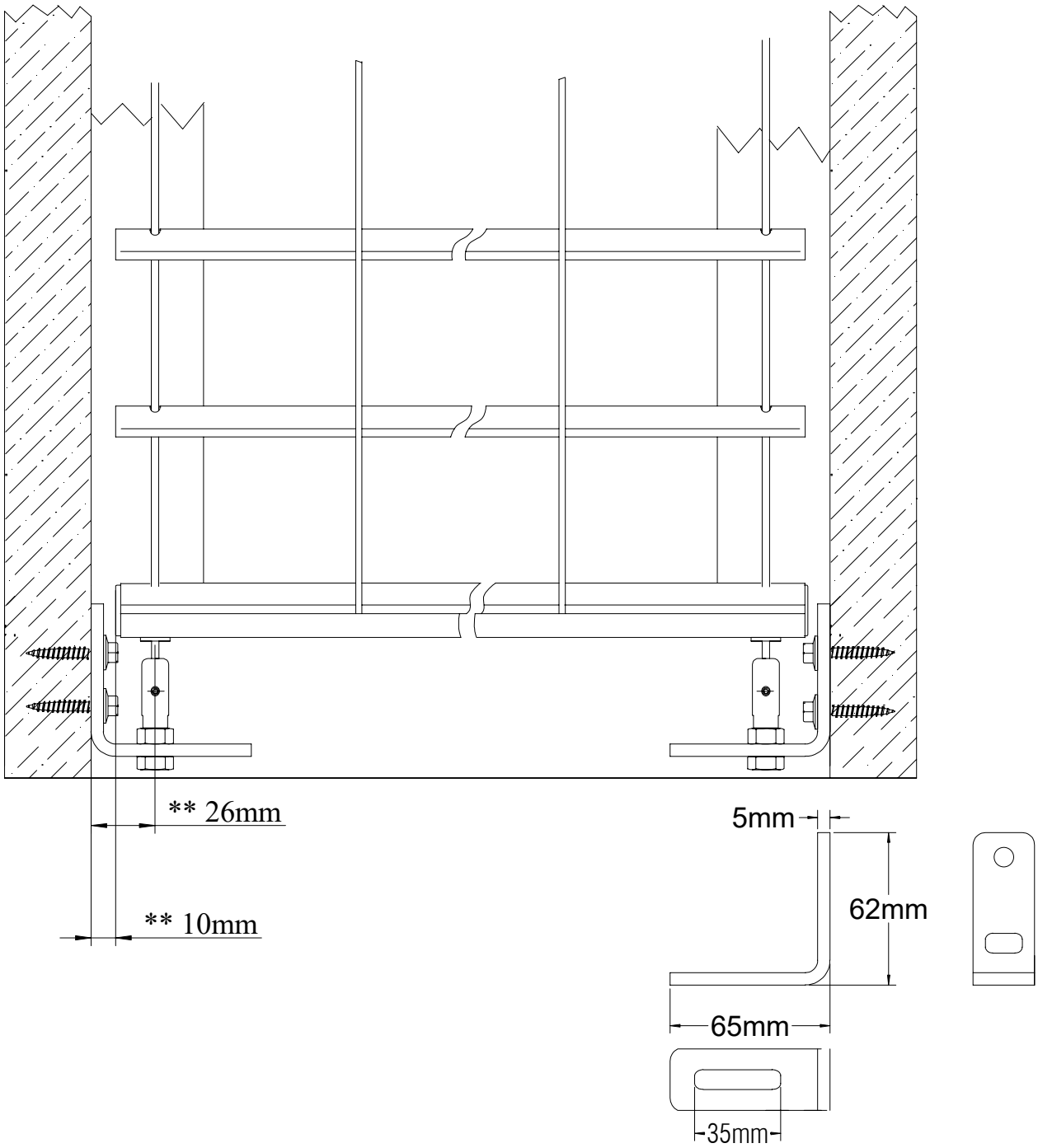

** Allowances shown are based on tight reveal measurements

evaya

2.1 EV80 Wire Guide with deck fix

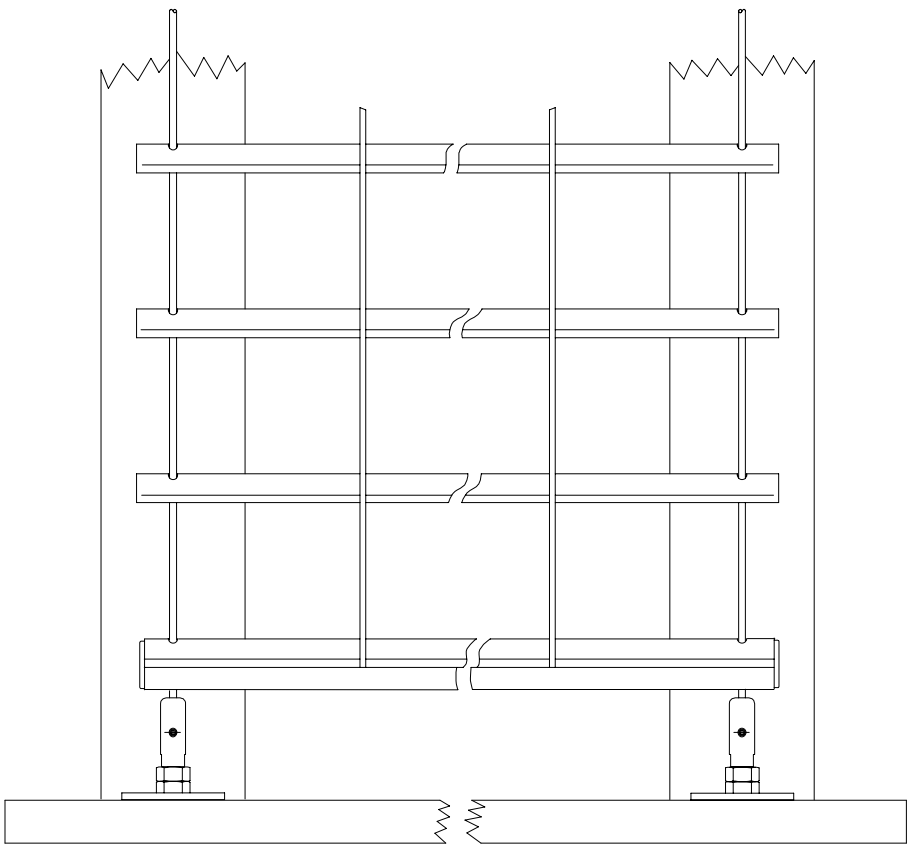

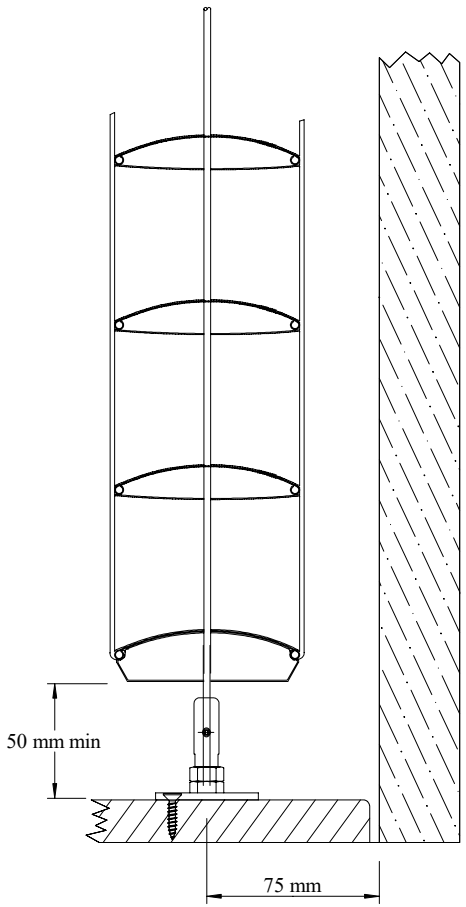

Typical Fixing

2.2 EV80 Wire Guide with face fix

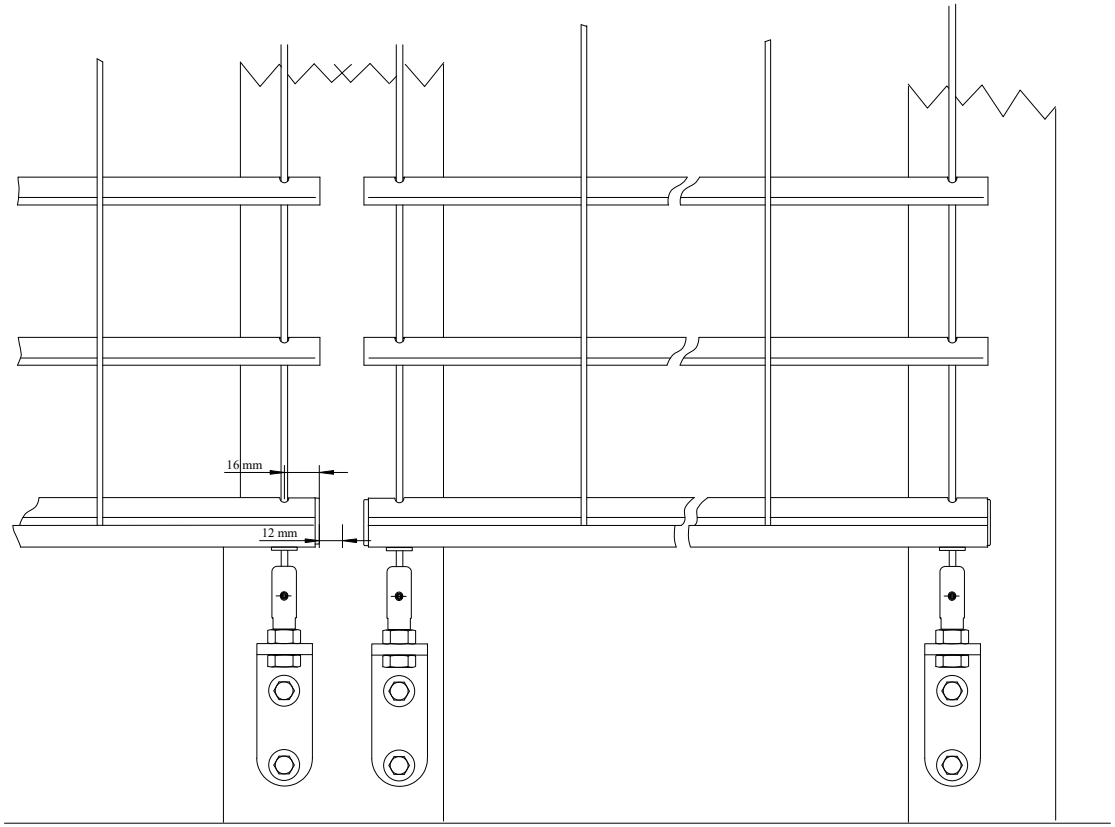

Double

Single

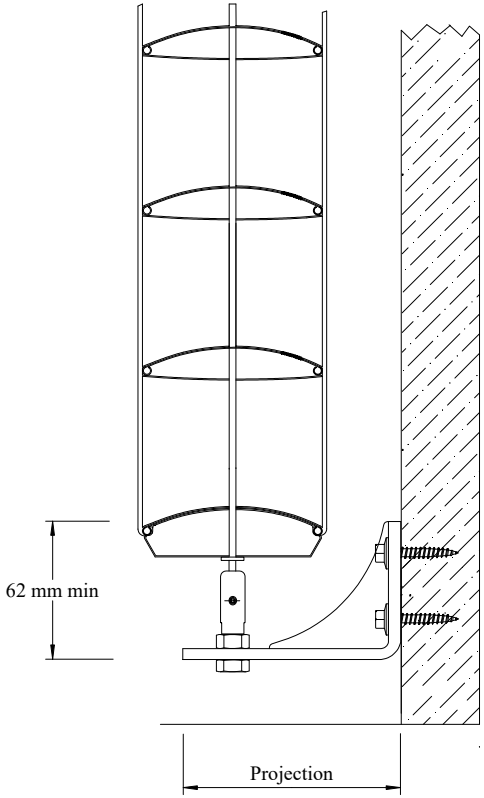

Typical Fixing
Stand off brackets complete
with gusset reinforment
Bracket Options
90mm Projection
155mm Projection
235mm Projection

evaya

2.3 EV80 Side Channel Type A -Double and Single

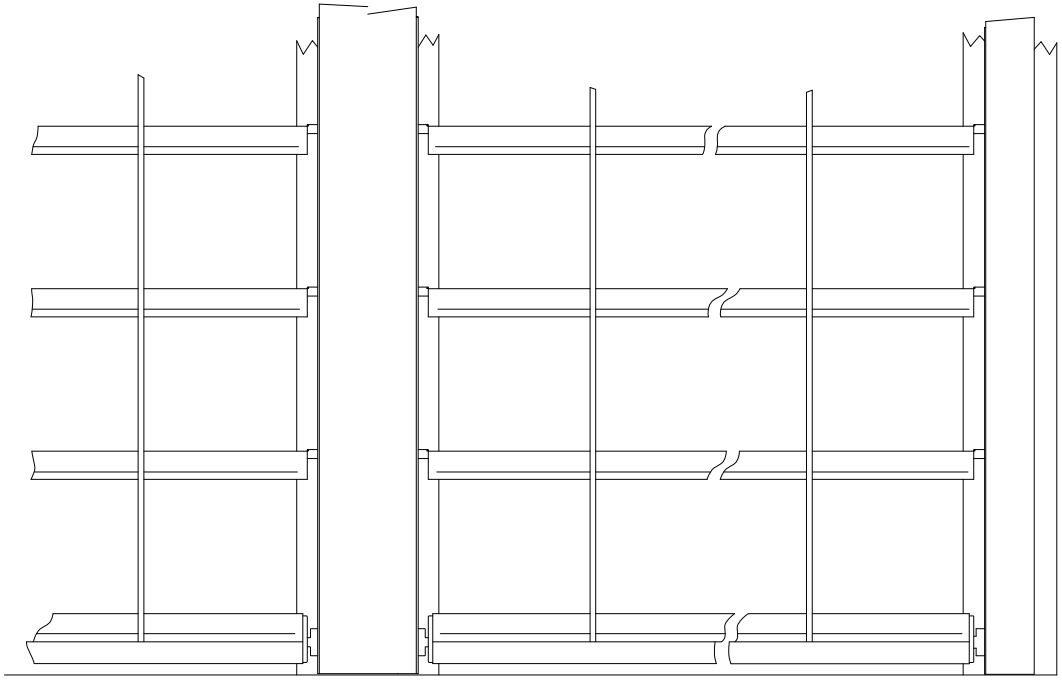

Typical Fixing

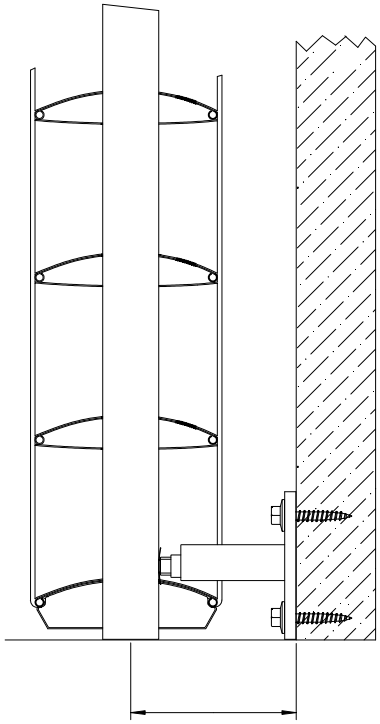

Stand off brackets available
range from 75mm to 165mm.

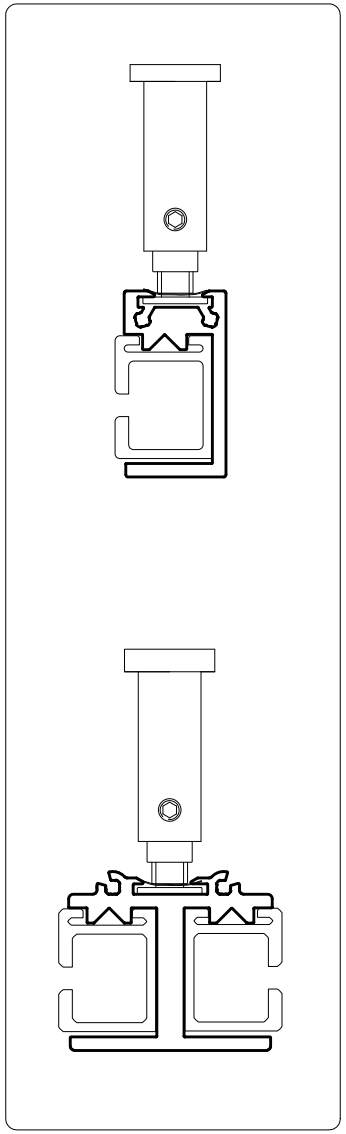

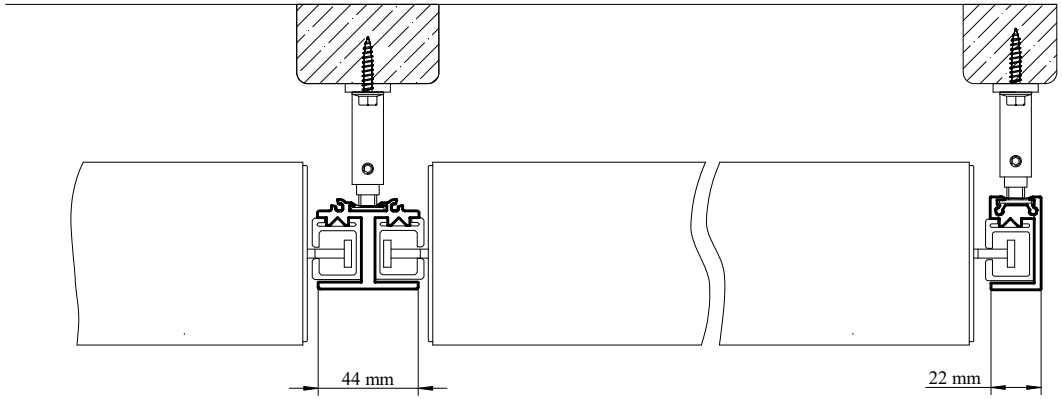

evaya

2.4 EV80 Side Channel Type B

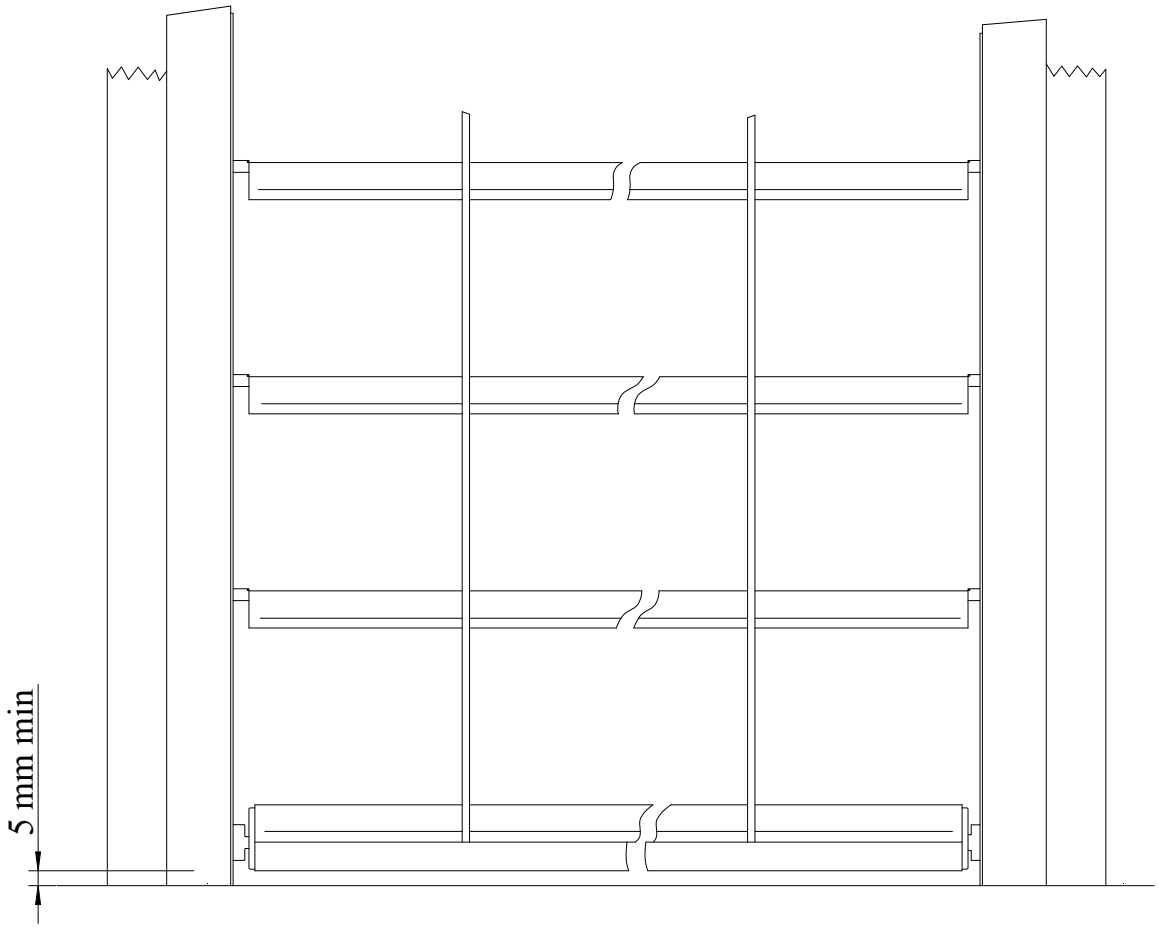

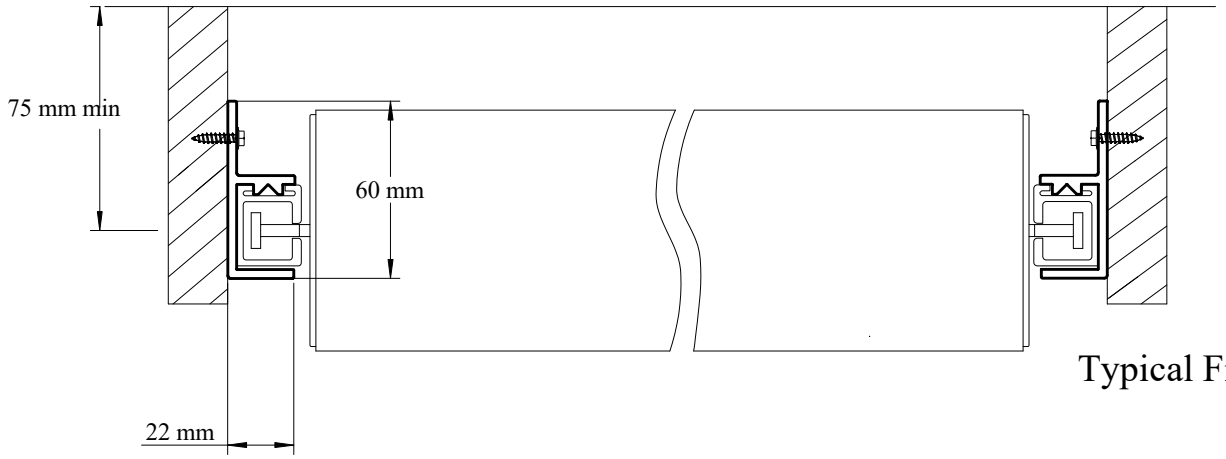

Typical Fixing

evaya

2.5 EV80 Side Channel Type C

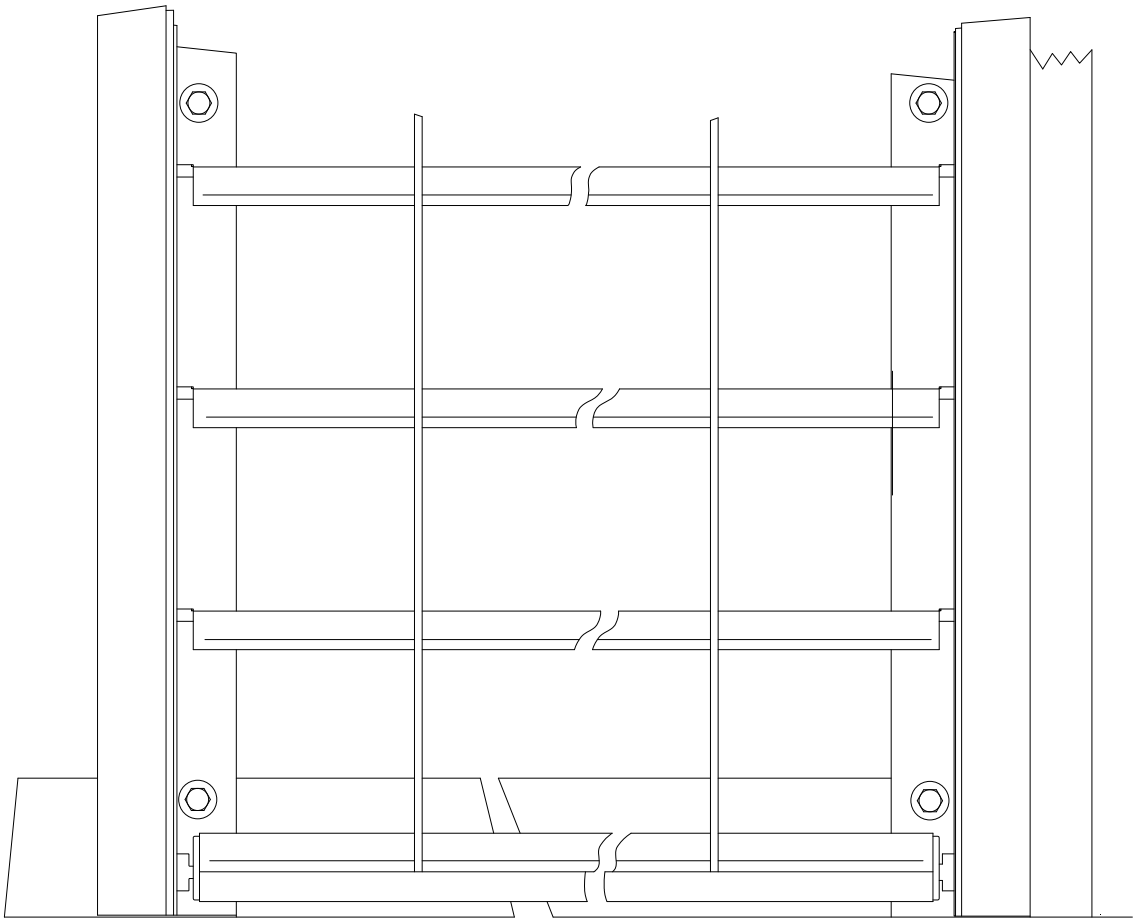

Typical Fixing

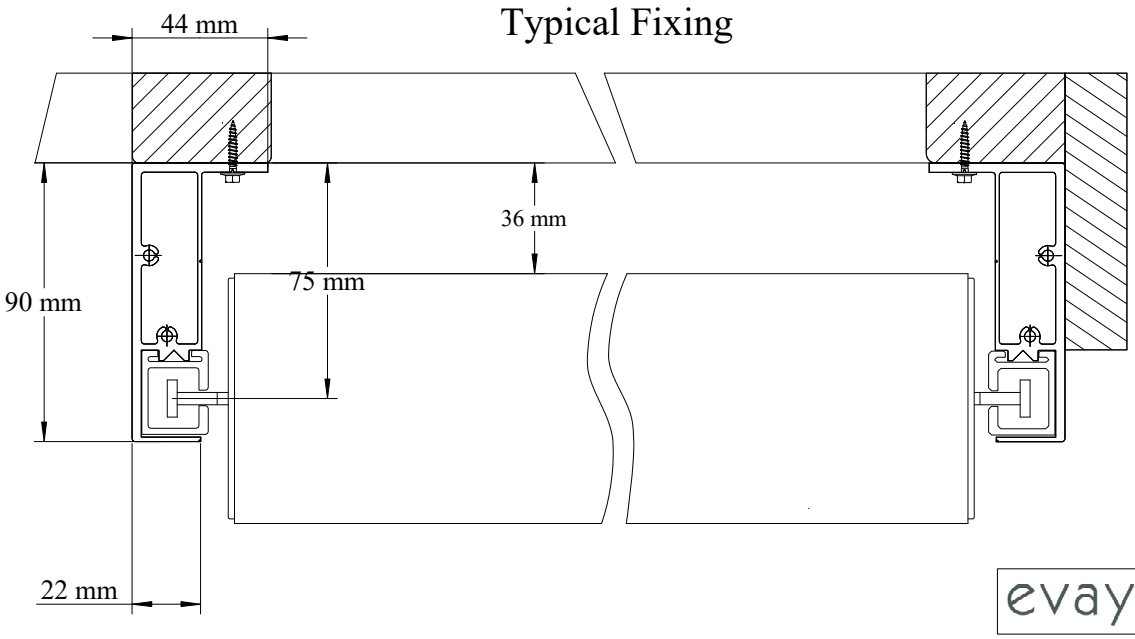

2.6 EV80 Side Channel Type D

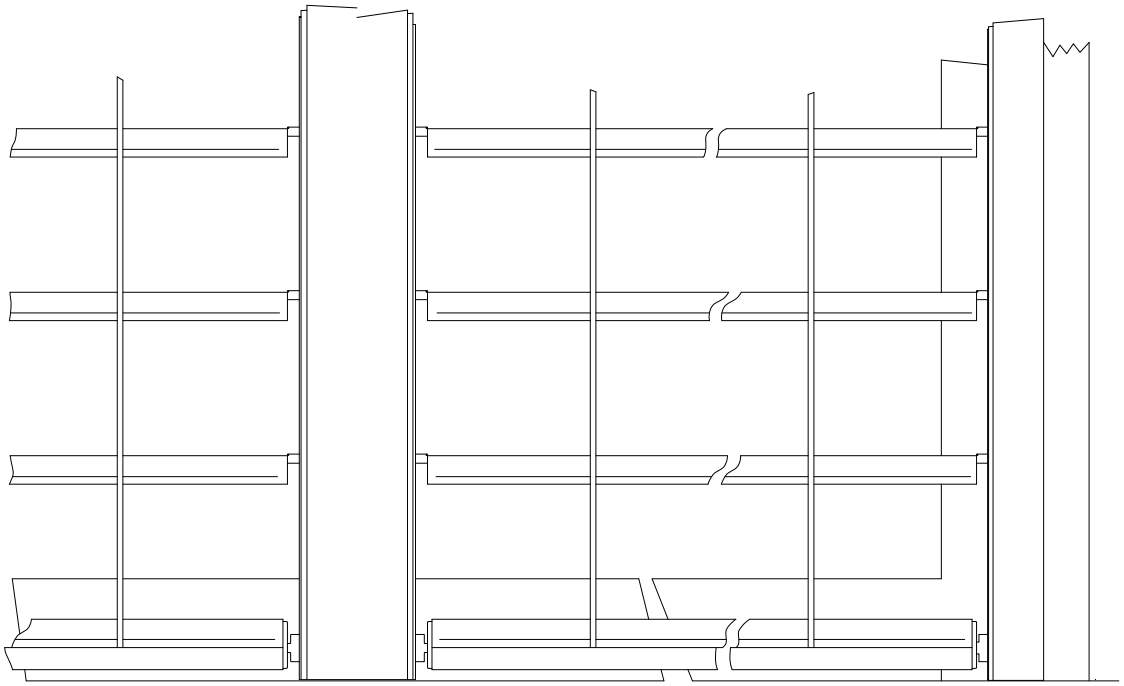

Typical Fixing

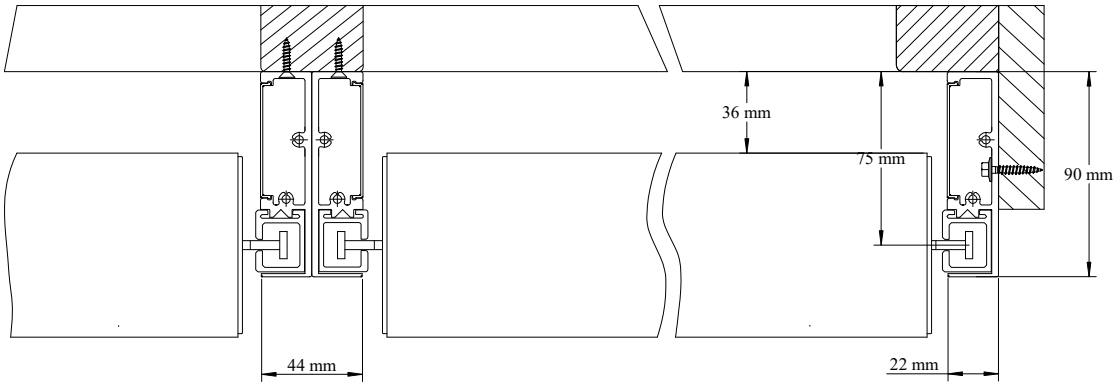

2.6a EV80 Side Channel Type D2

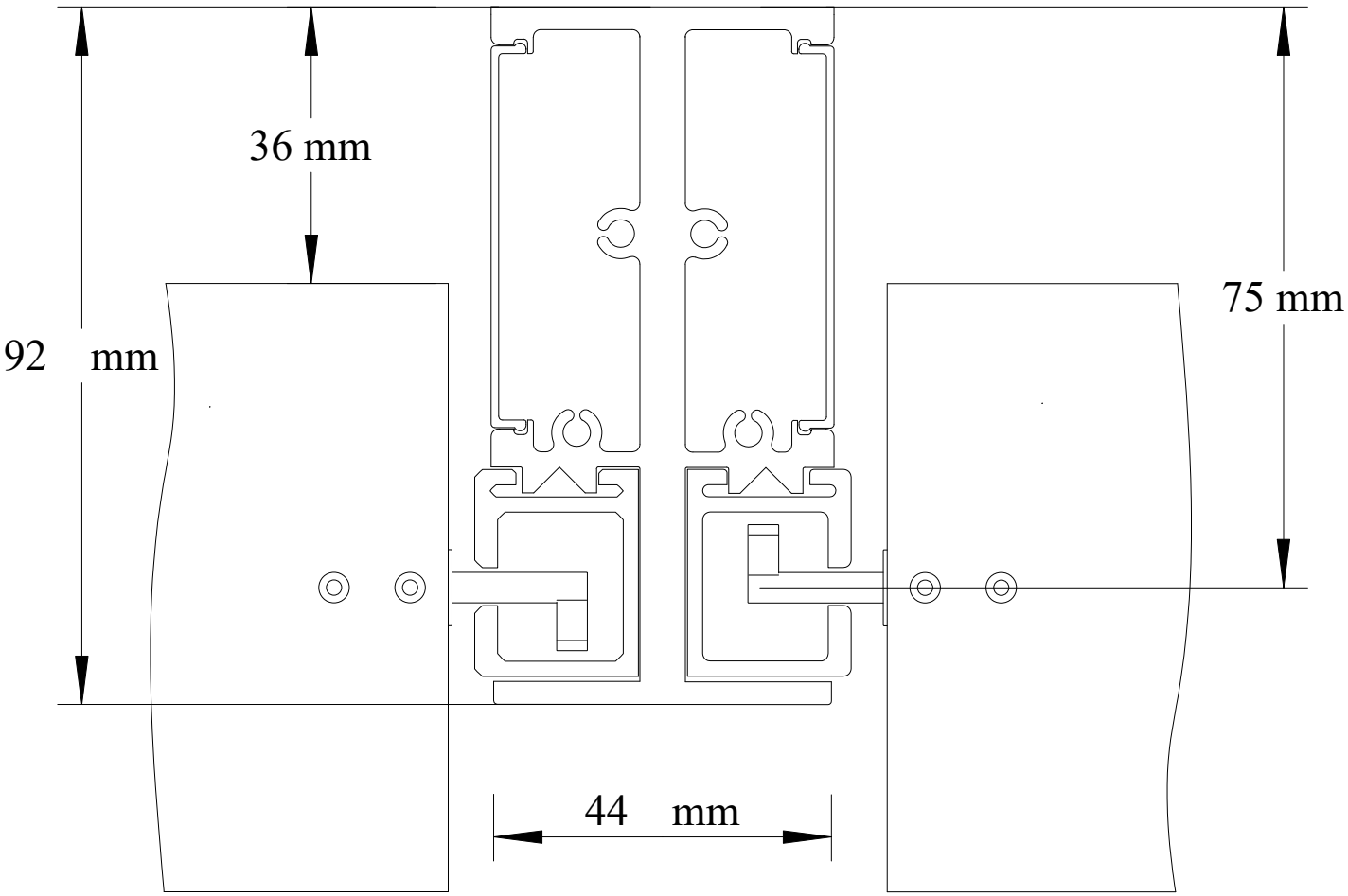

2.6b EV80 Side Channel Type D & D2

Self Supporting Base Plates

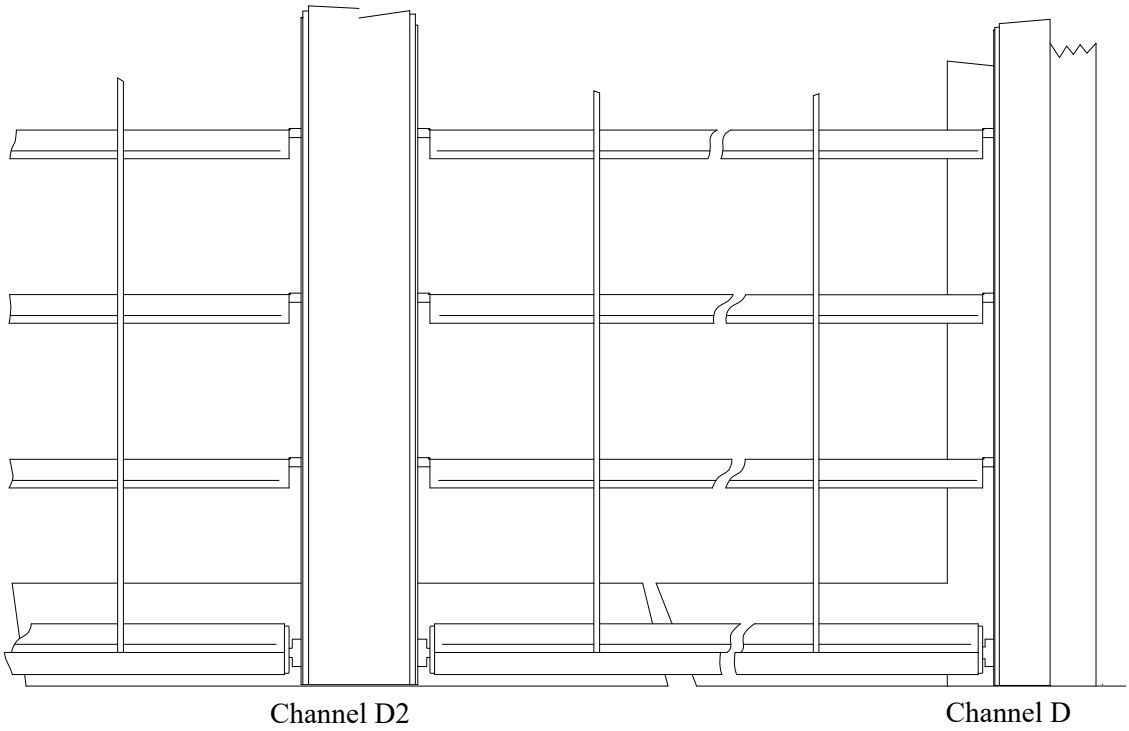

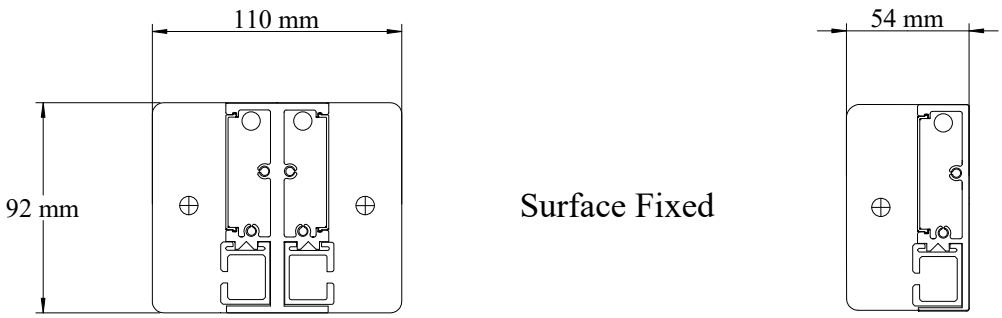

Base plates are required when channels are configured for a self supporting installation

2.7 EV80 Side Channel Type E

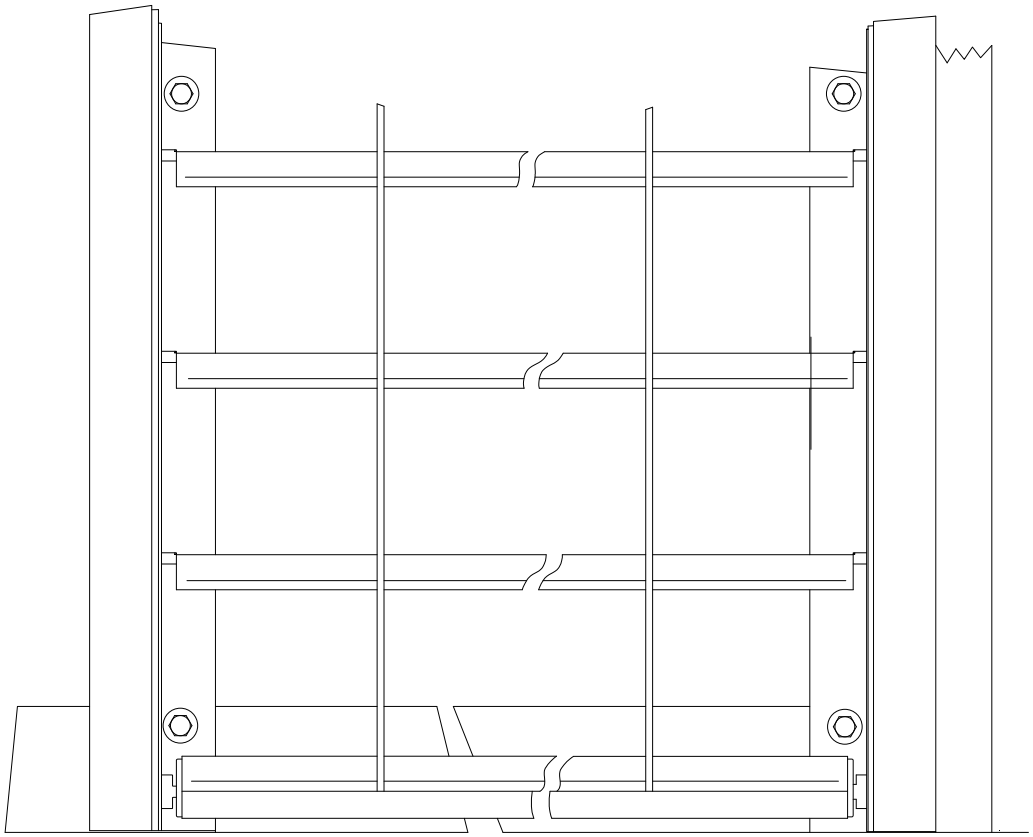

Typical Fixing

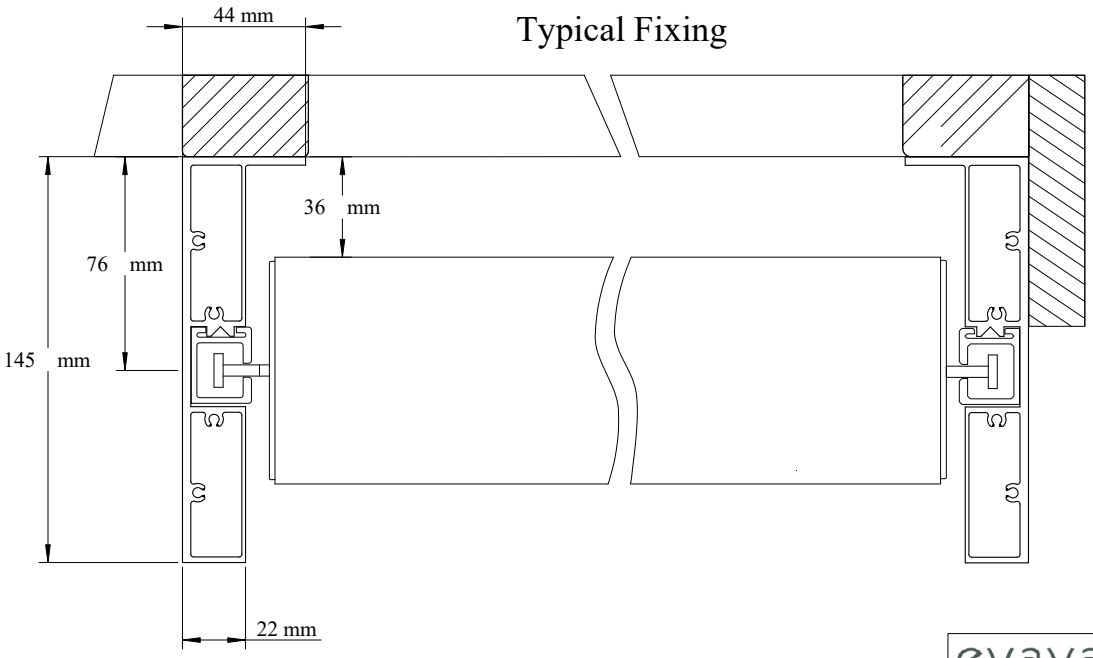

evaya

2.7a EV80 Side Channel Type G

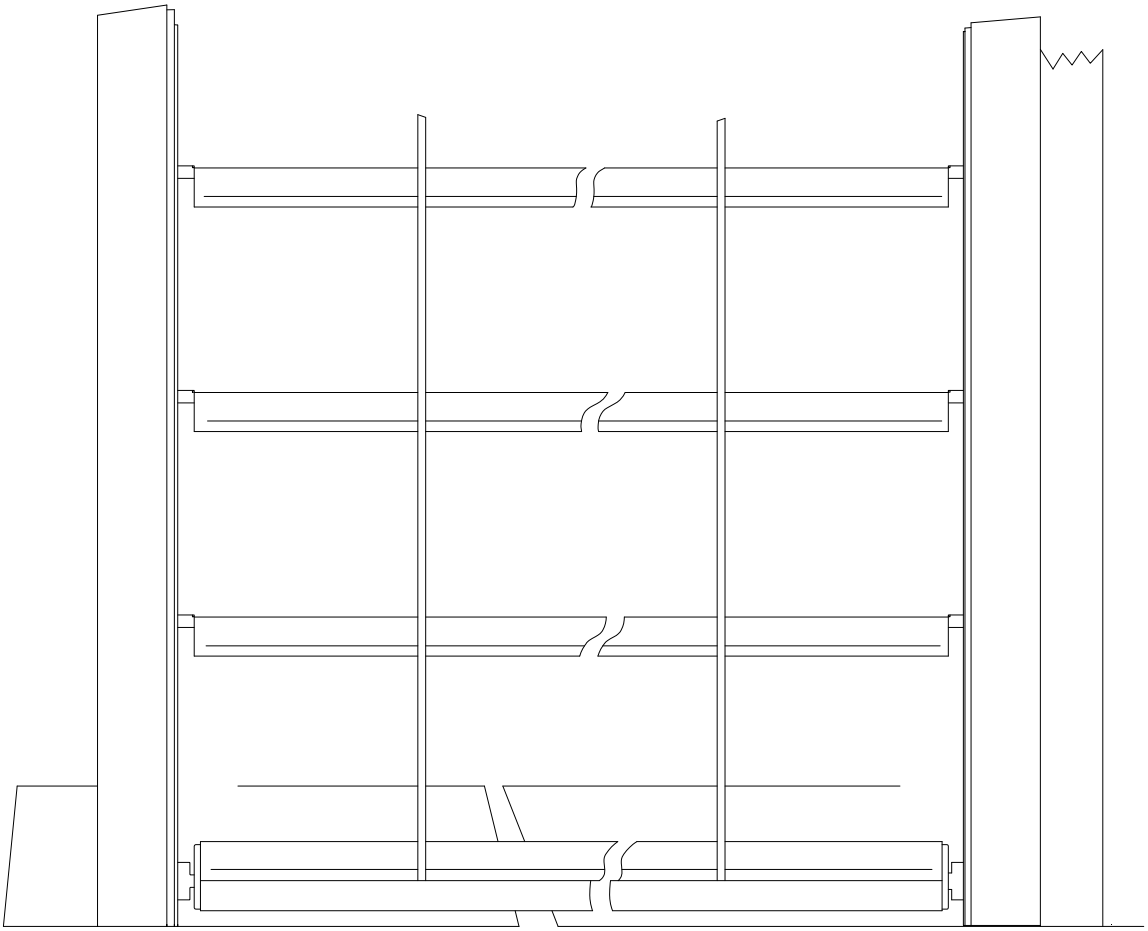

Typical Fixing

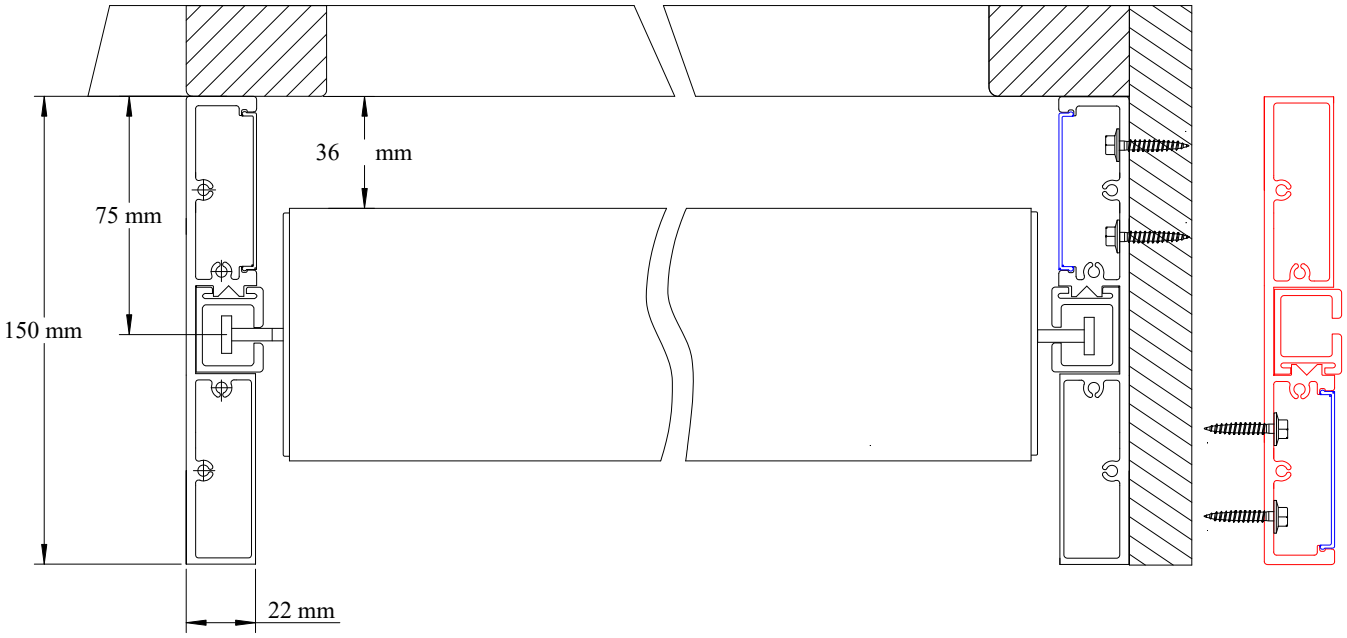

**Fixing chamber as shown in the red section can be reversed to allow for fixing either forward or rear of centre.
All fixings are concealed by push in cover strip as shown in blue.

evaya

2.8 EV80 SHROUD SYSTEM - PELMET TYPE A 206

Concealed Retracted Stack Height - 1500mm

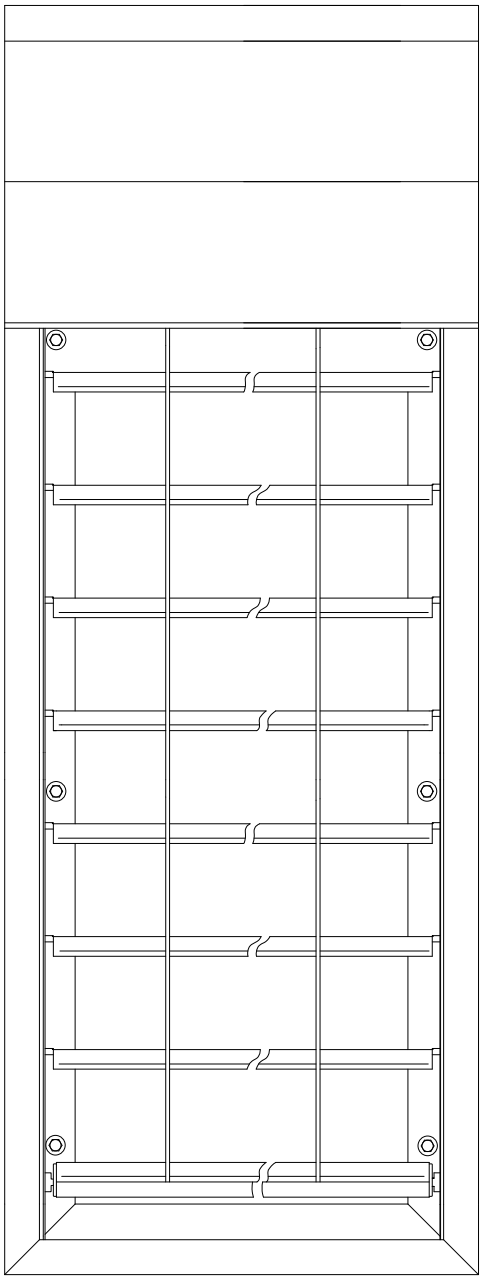

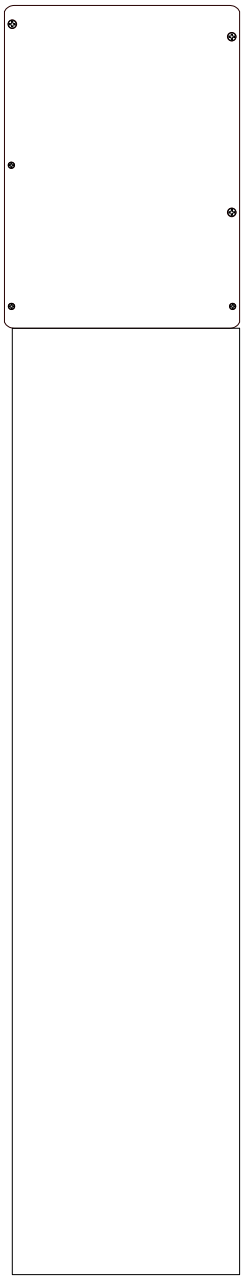

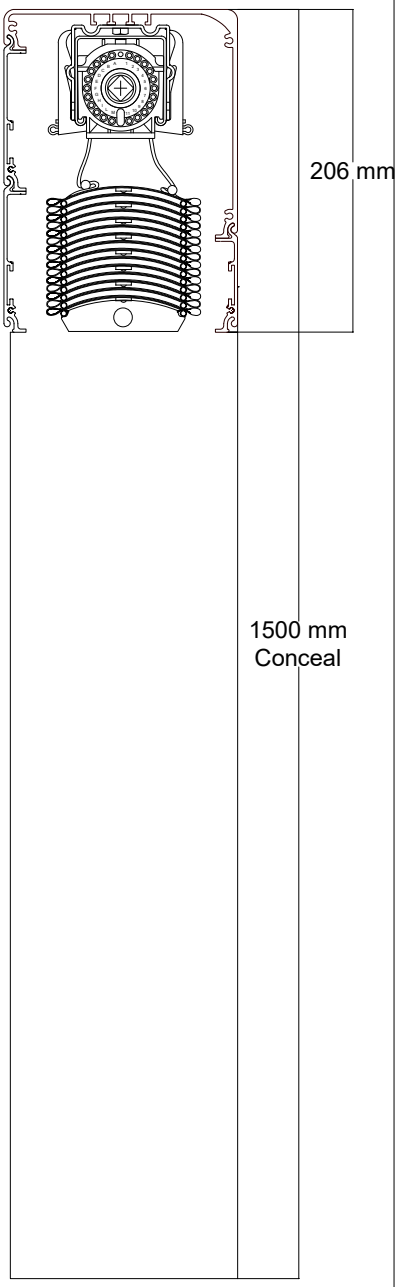

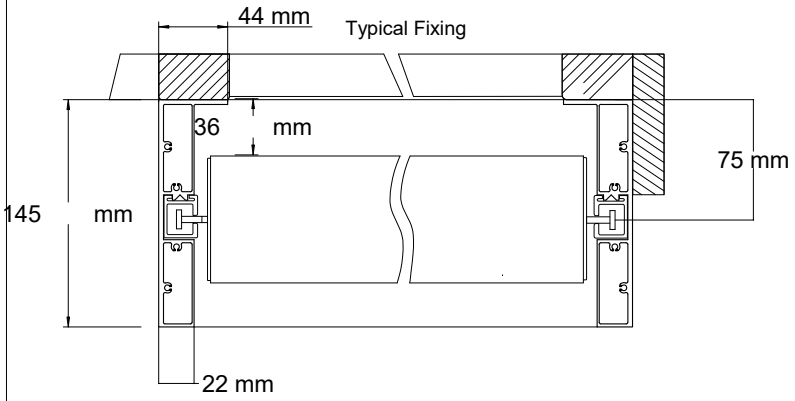

2.8a EV80 SHROUD SYSTEM - PELMET TYPE B 236

Concealed Retracted Stack Height - 1800mm

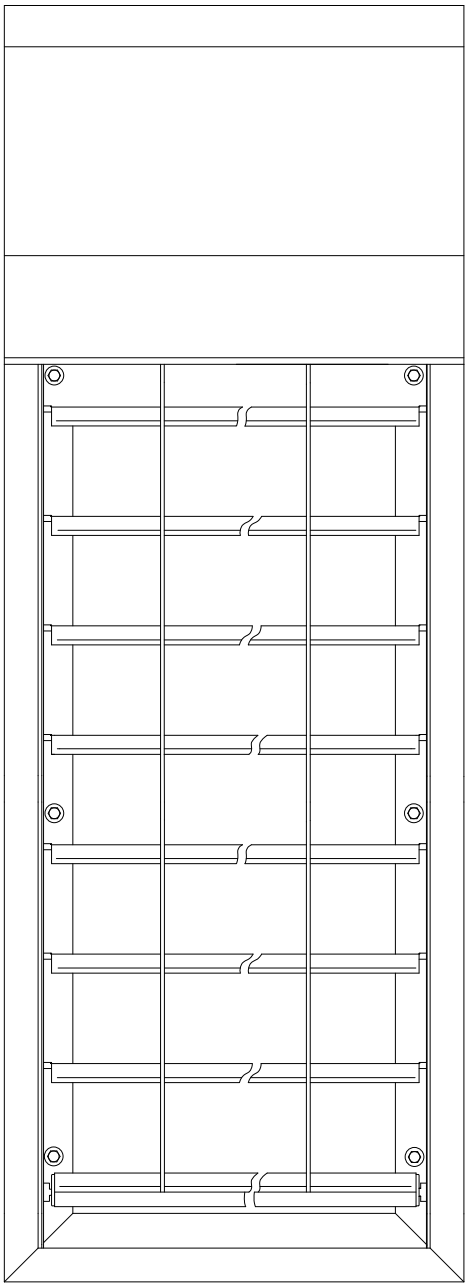

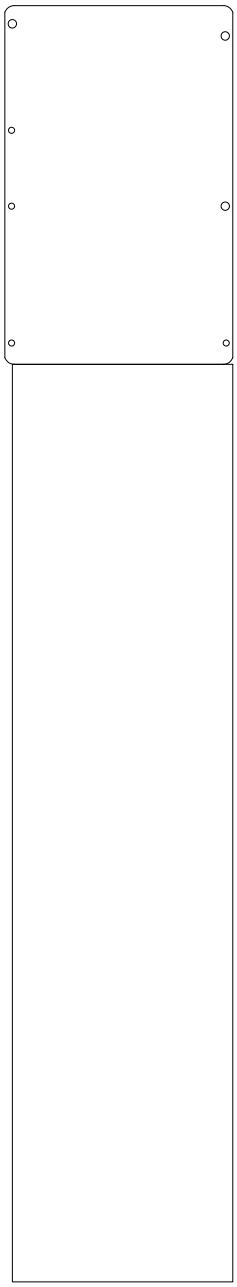

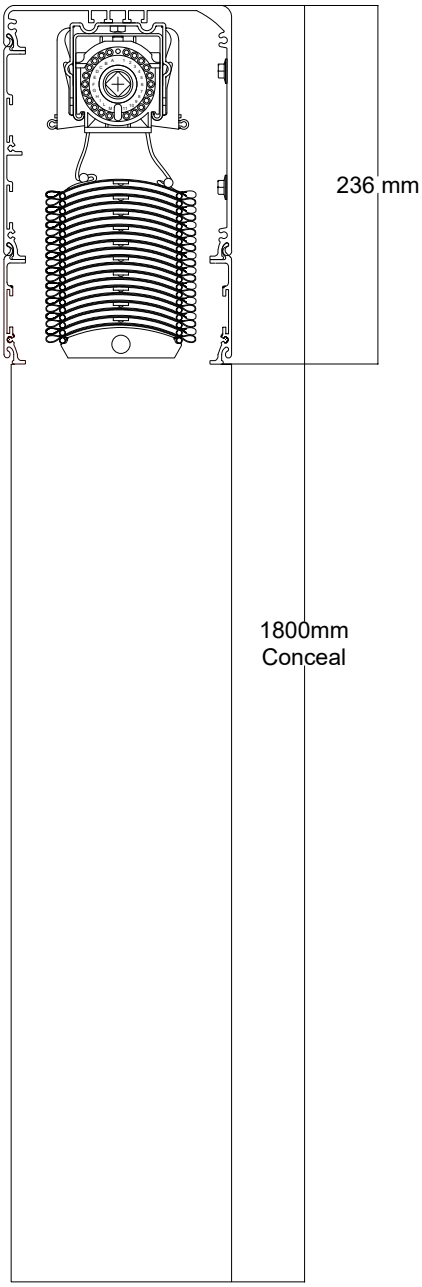

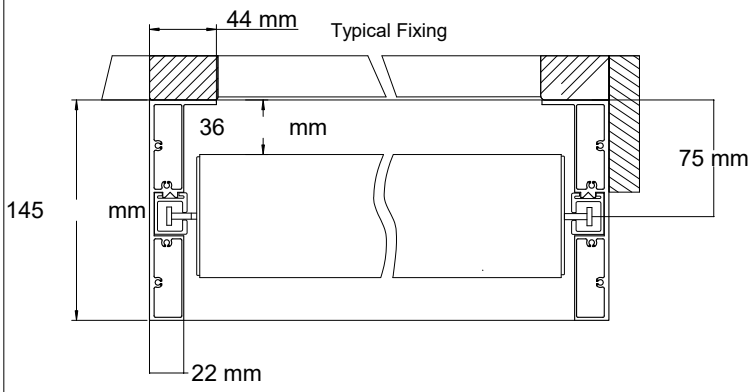

2.8b EV80 SHROUD SYSTEM - PELMET TYPE B 266

Concealed Retracted Stack Height - 2100mm

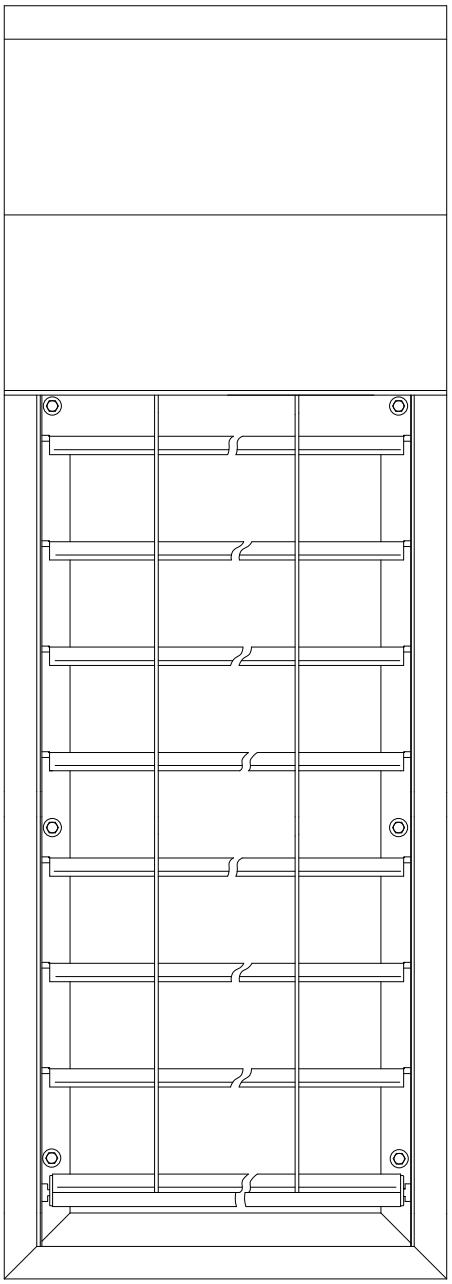

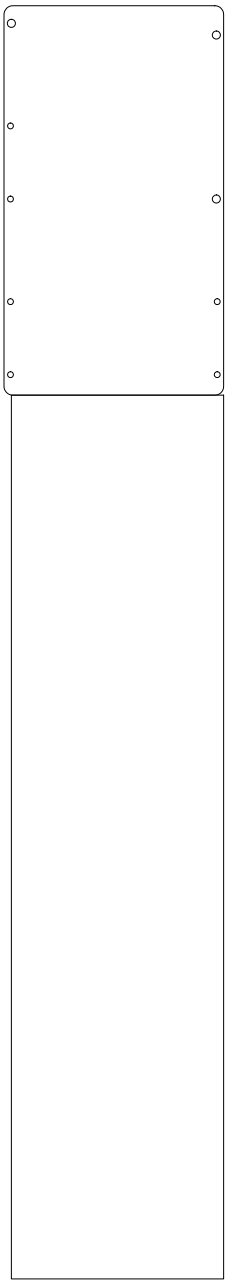

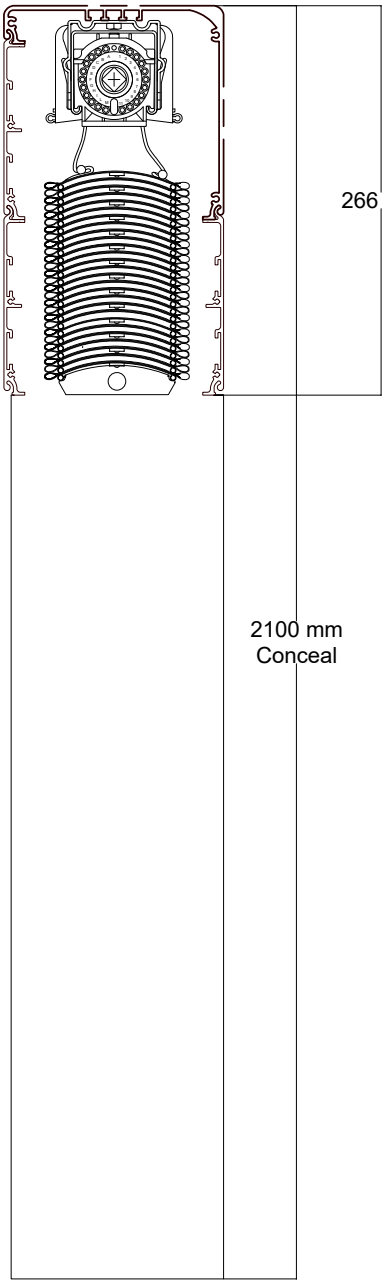

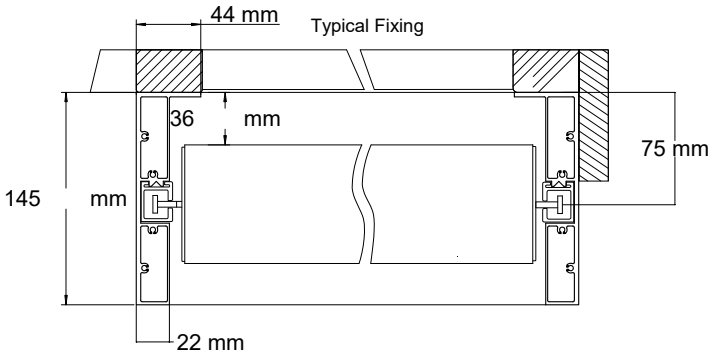

2.8b1 - EV80 SHROUD SYSTEM - PELMET TYPE B 296

Conceal Retracted Stack Height - 2700mm

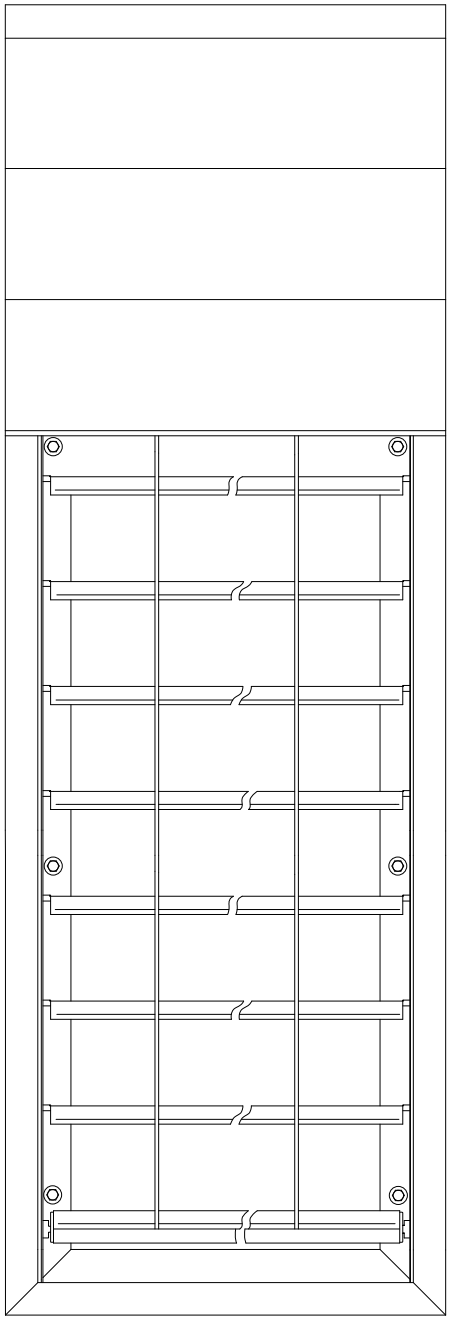

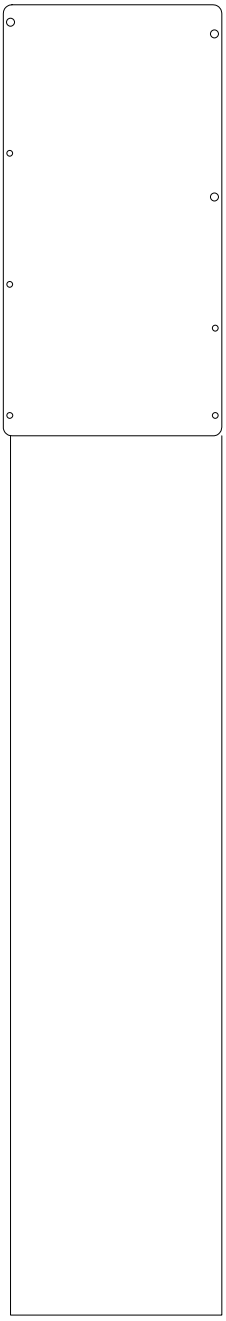

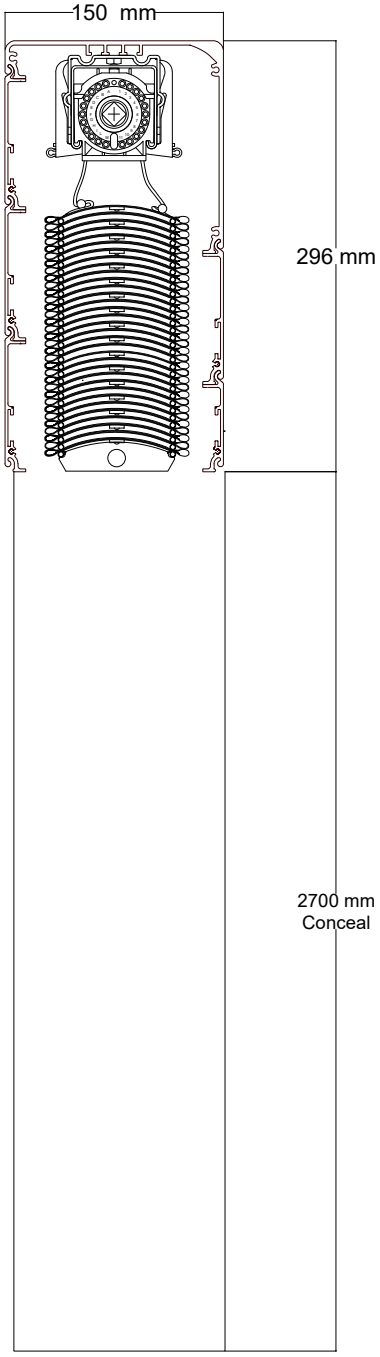

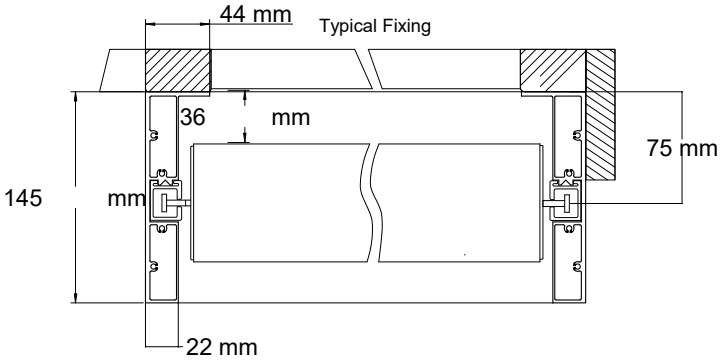

2.8c EV80 SHROUD SYSTEM - PELMET TYPE B 326

Concealed Retracted Stack Height - 3000mm

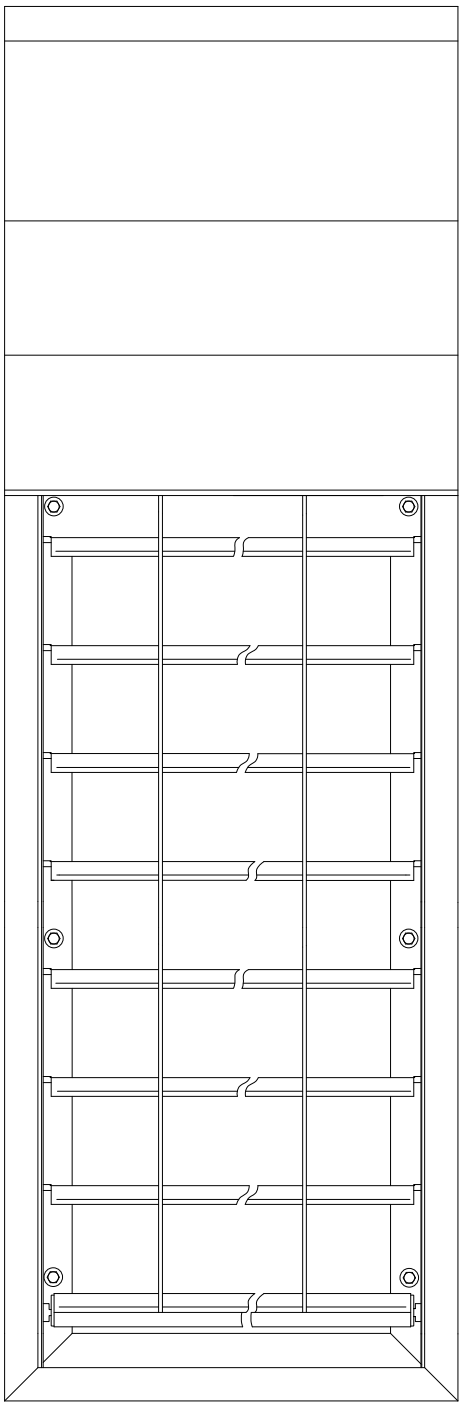

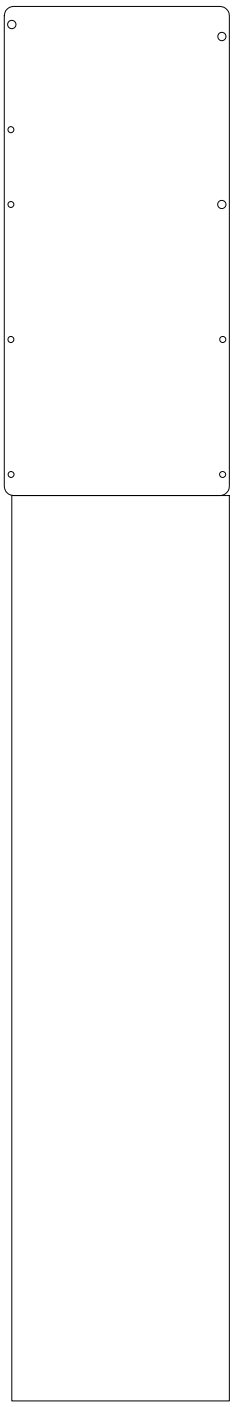

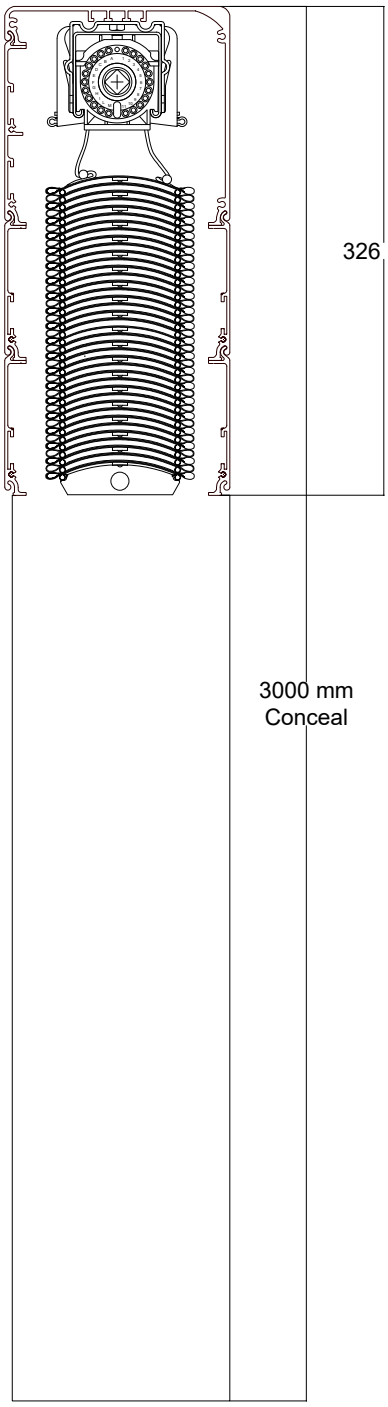

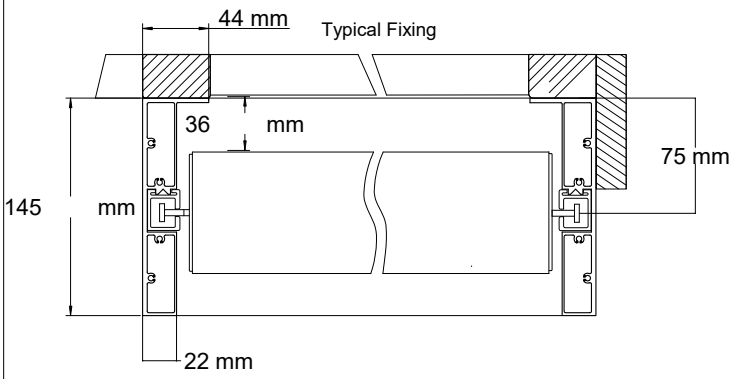

2.8d EV80 SHROUD SYSTEM - PELMET TYPE B 386

Concealed Retracted Stack Height - 3800mm

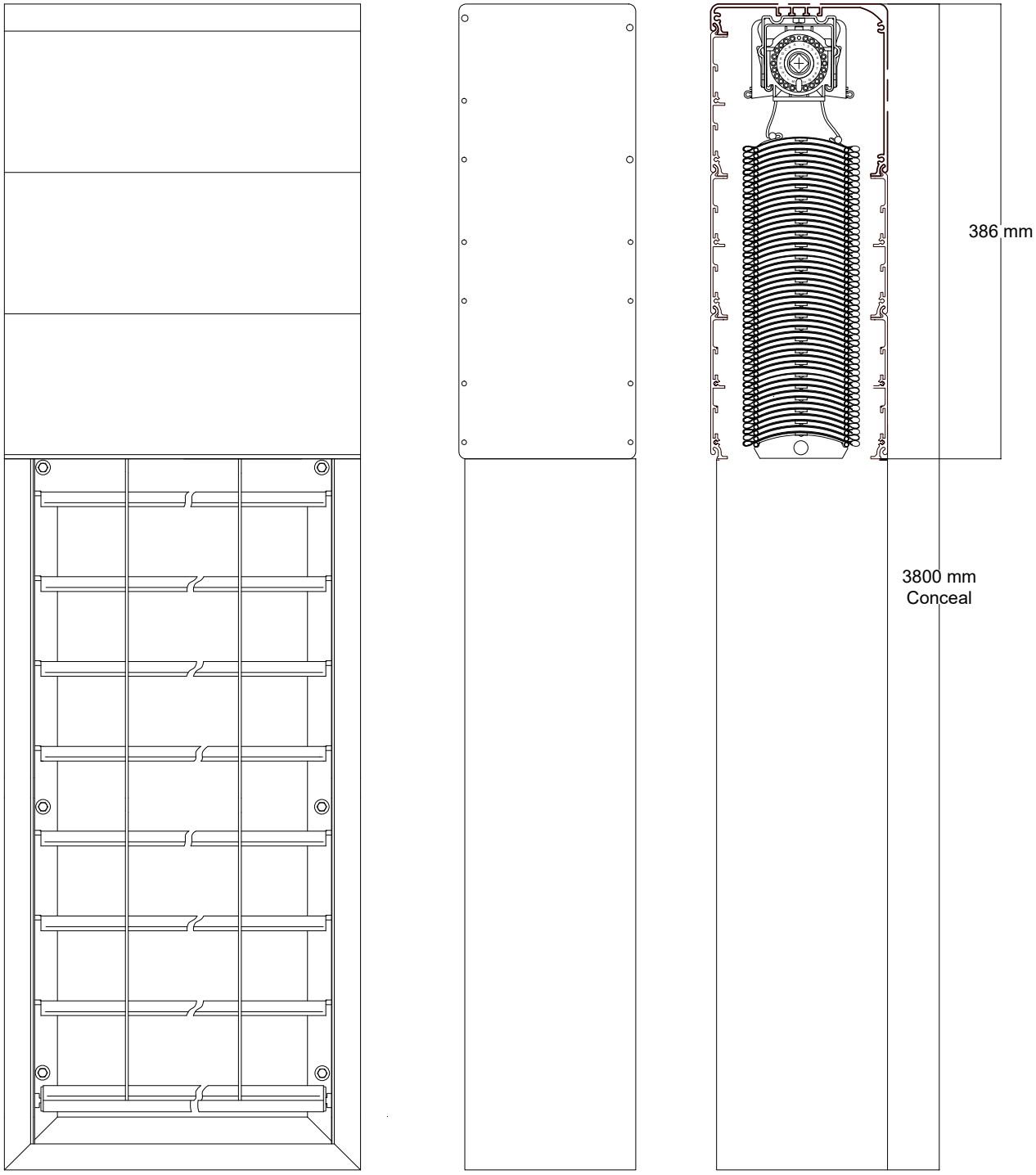

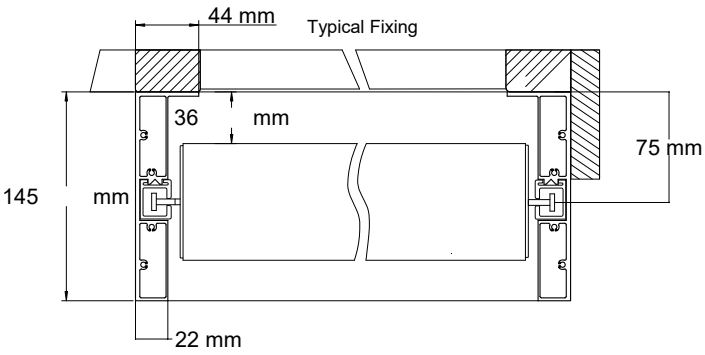

2.9 EV80 Universal Intermediate Wire Guides

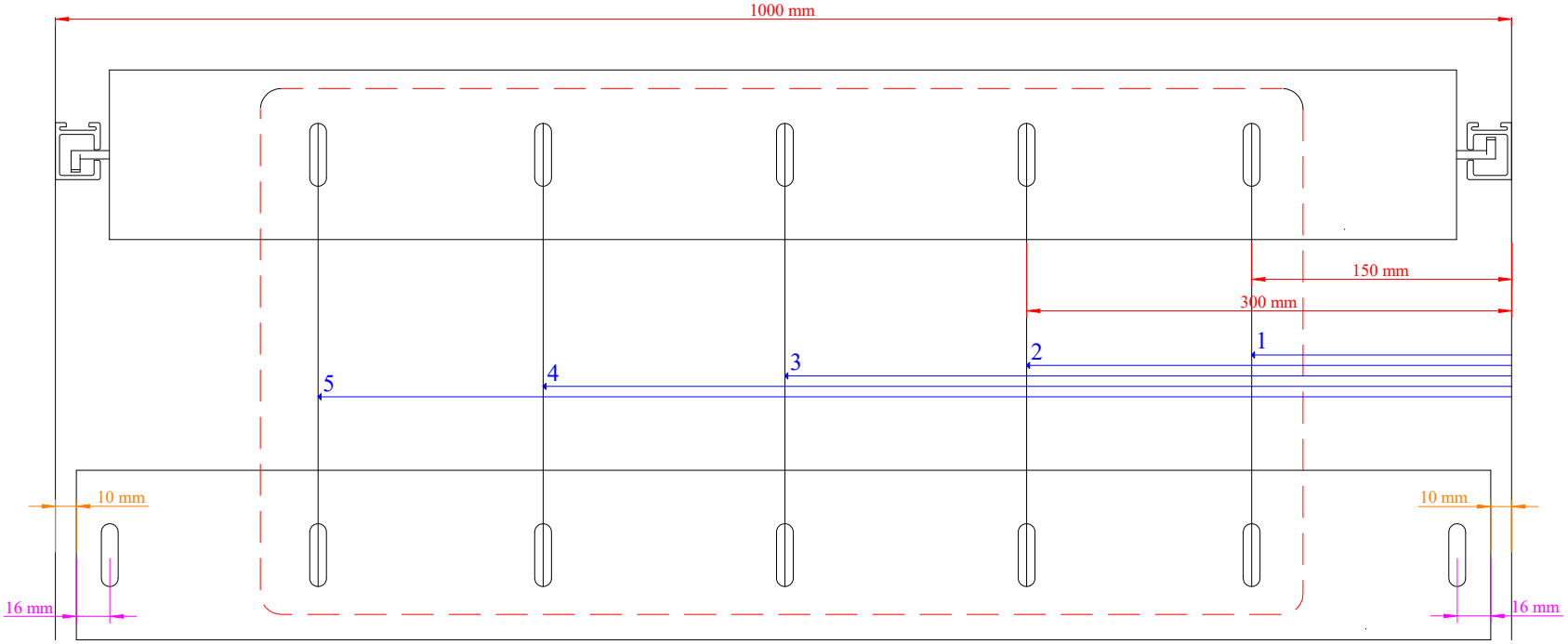

Up to an additional 5 drawn slots / guides can be produced in the system.

Measurements for intermediate wires MUST be made from right to left when viewed from the outside looking inward.

In the above example the specification would be detailed as follows;
Finished Width Overall Unit = 1000 mm
Mesaure To Position Of 1st Intermediate Wire = 150 mm
Measure To Position Of 2nd Intermediate Wire = 300 mm

N.B: Type 1 - 10mm is the minimum allowance or tolerance from blade edge to overall measured size. Example can be assumed as;

Finished Width Overall Unit = 1000 mm
Finished Blade Width Type 1 = 990 mm

Type 1 - Distance to center of standard 1st and last (outside) hole punch = 16 mm

evaya

3.1 Pelmet Type A 206 - EV80

Concealed Retracted Stack Height - 1500mm

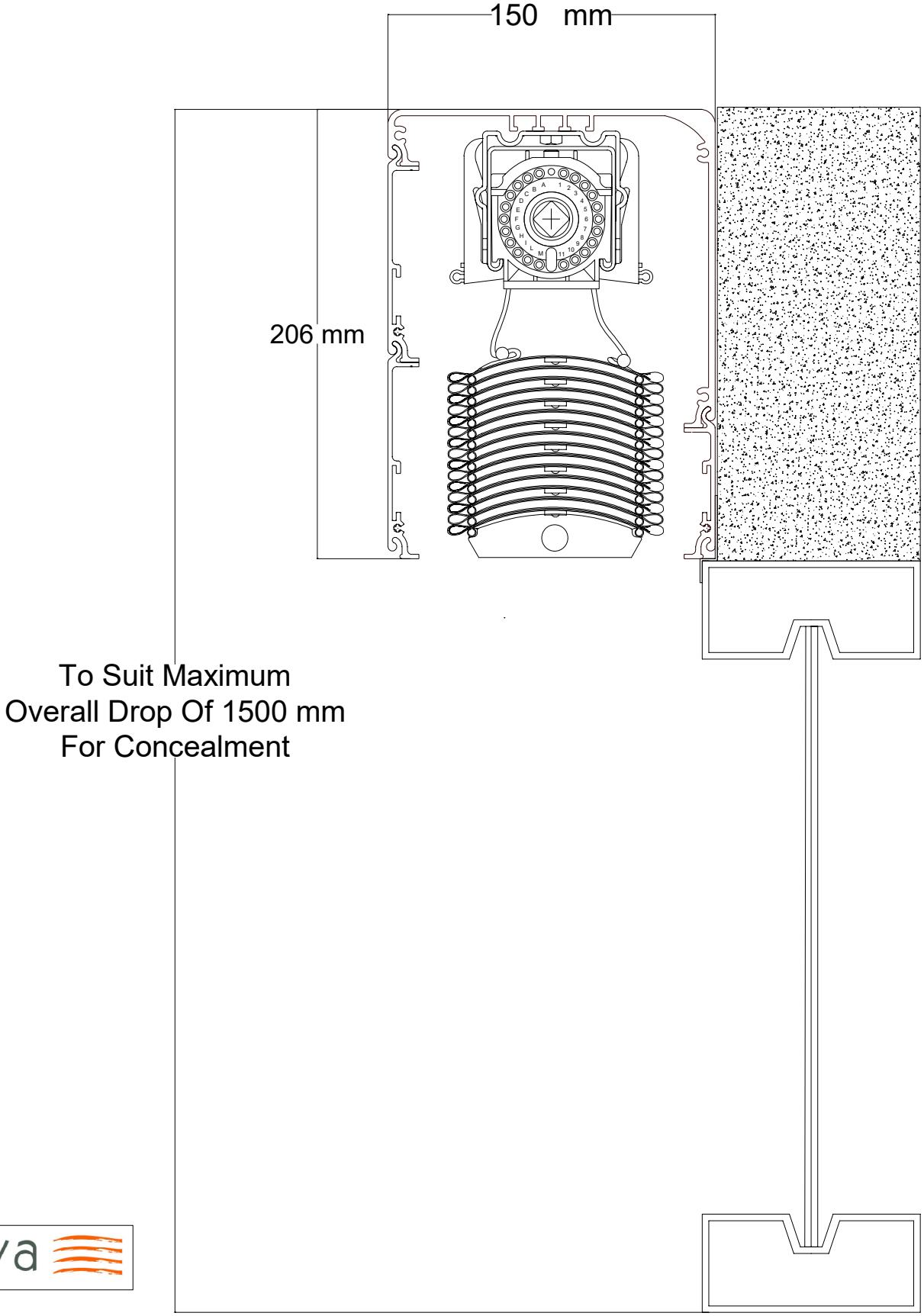

3.2a Pelmet Type B 236 - EV80

Conceal Retracted Stack Height - 1800mm

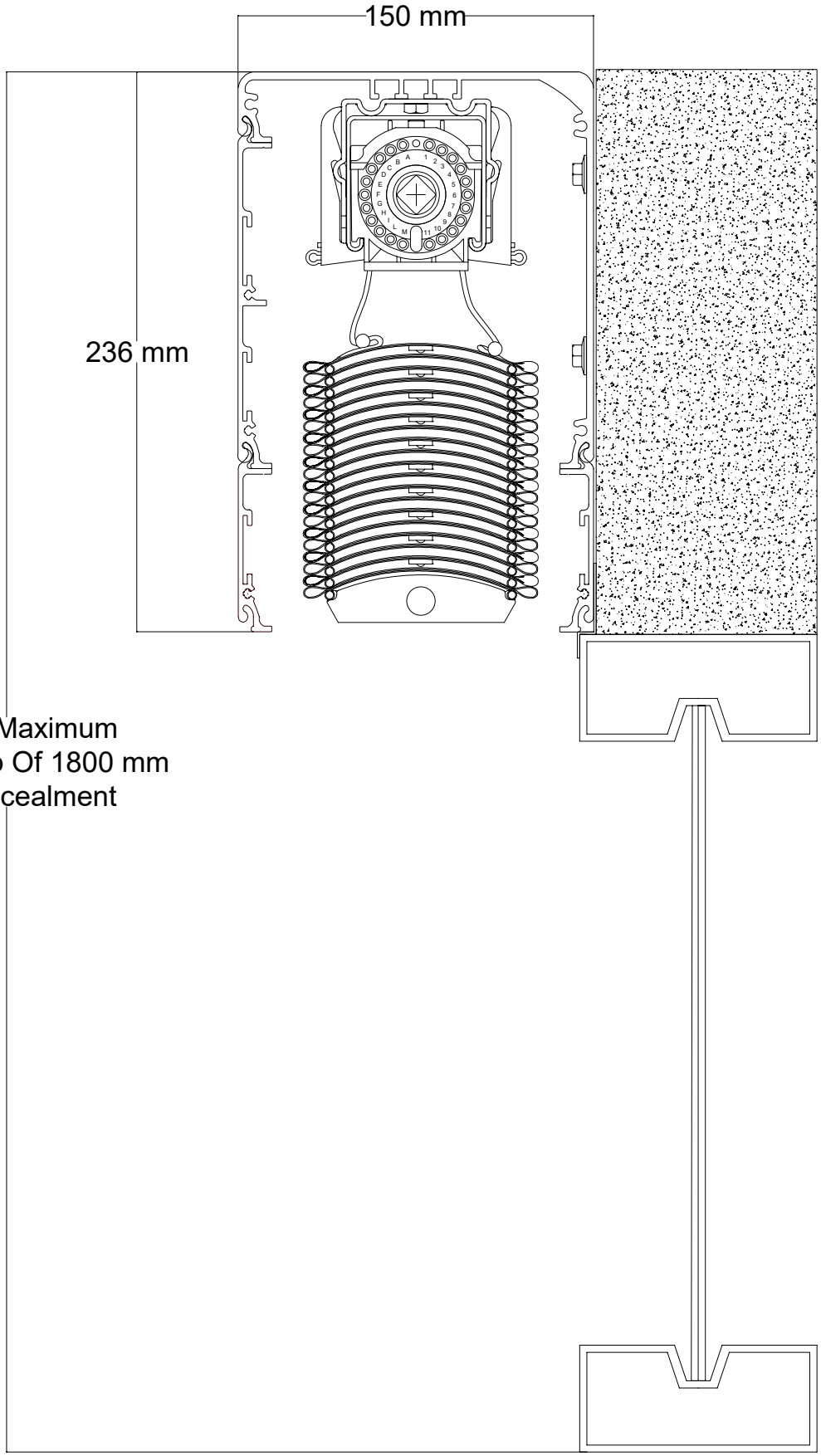

To Suit Maximum
Overall Drop Of 1800 mm
For Concealment

evaya

3.2b Pelmet Type B 266 - EV80

Conceal Retracted
Stack Height - 2100mm

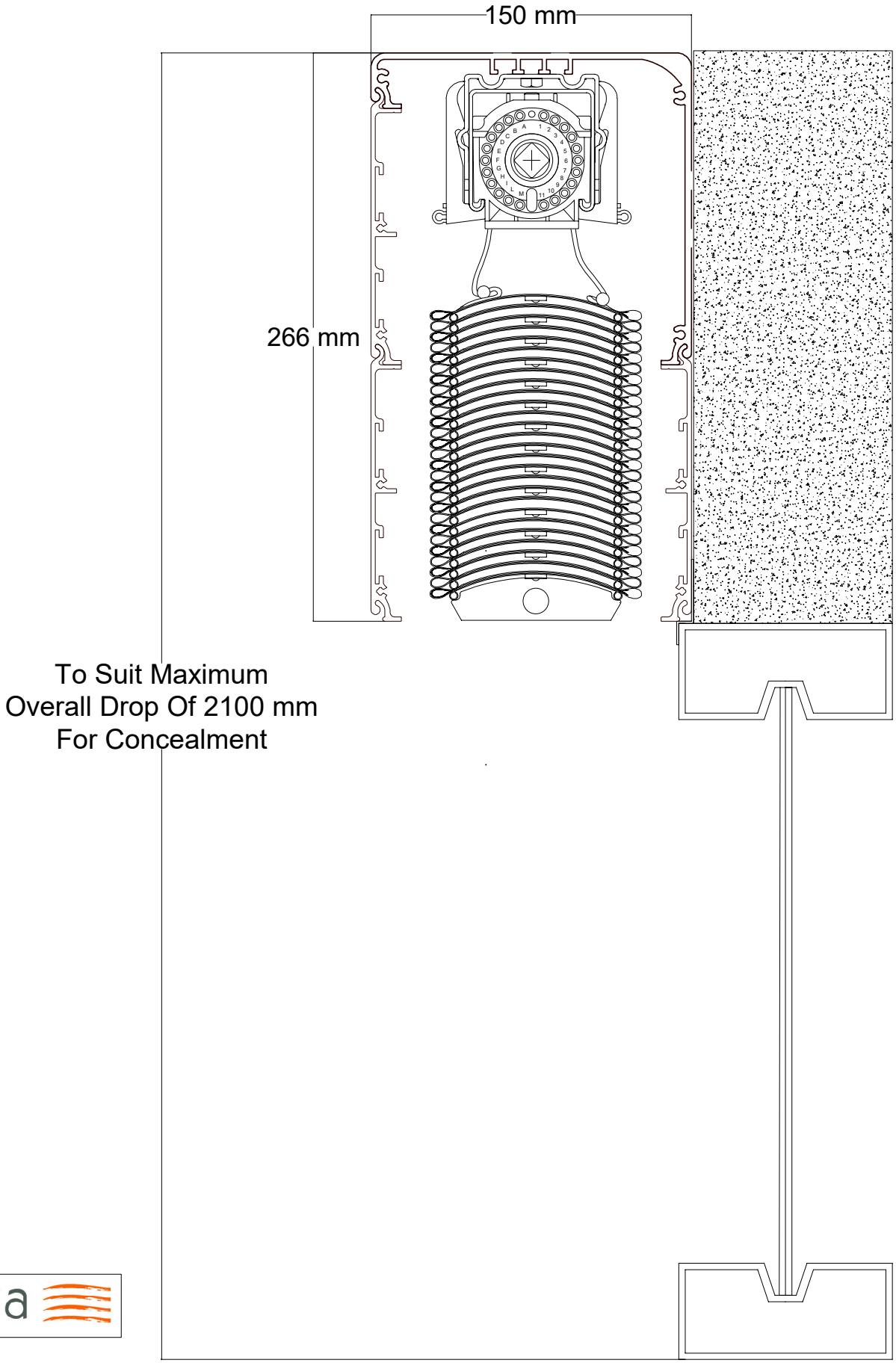

3.2b Pelmet Type B 296 - EV80

Conceal Retracted
Stack Height - 2700mm

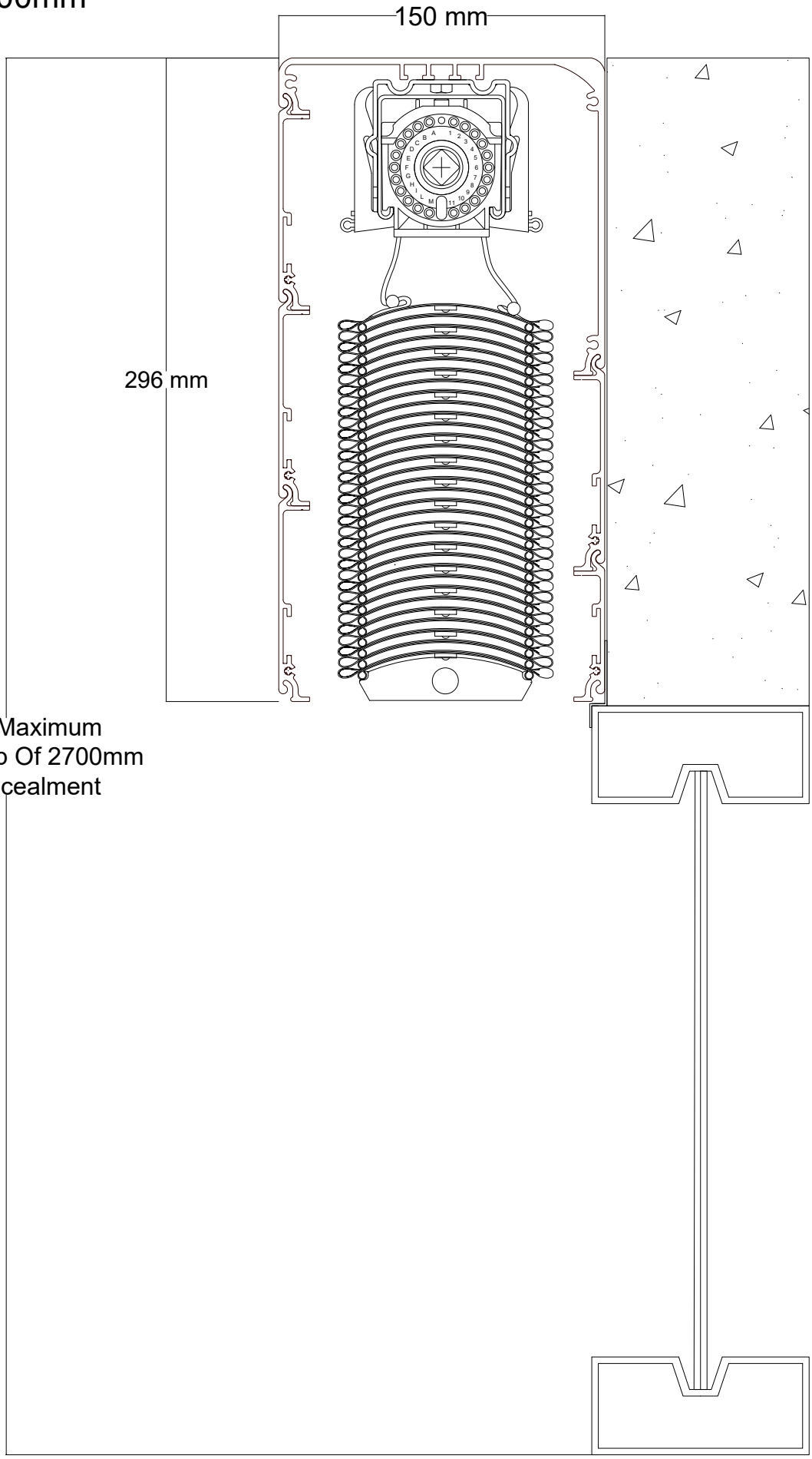

To Suit Maximum
Overall Drop Of 2700mm
For Concealment

evaya

3.2c Pelmet Type B 326 - EV80

Conceal Retracted
Stack Height - 3000mm

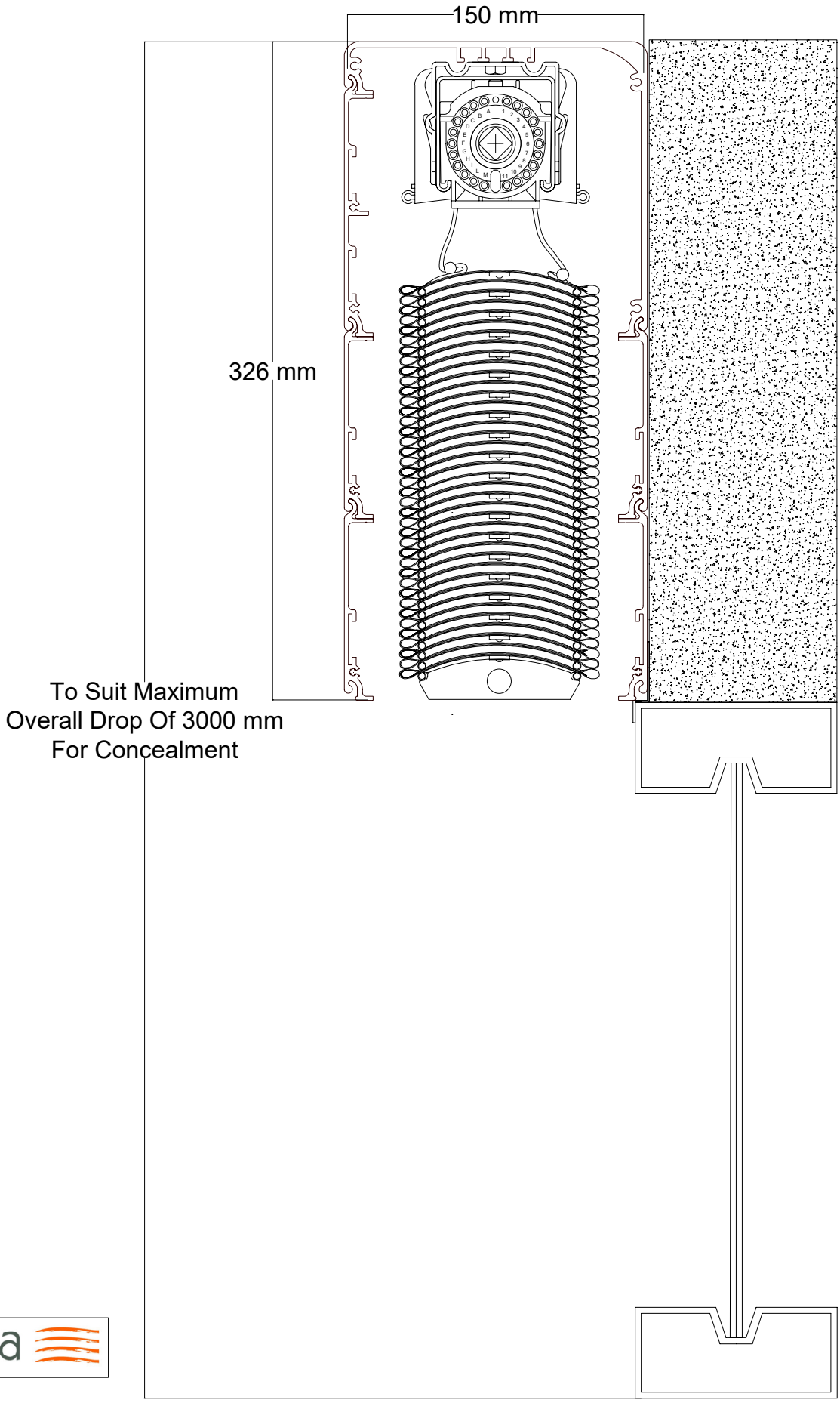

PELMET TYPE B 326
FASCIA BRACE

5MM STAINLESS STEEL
30MM WIDE

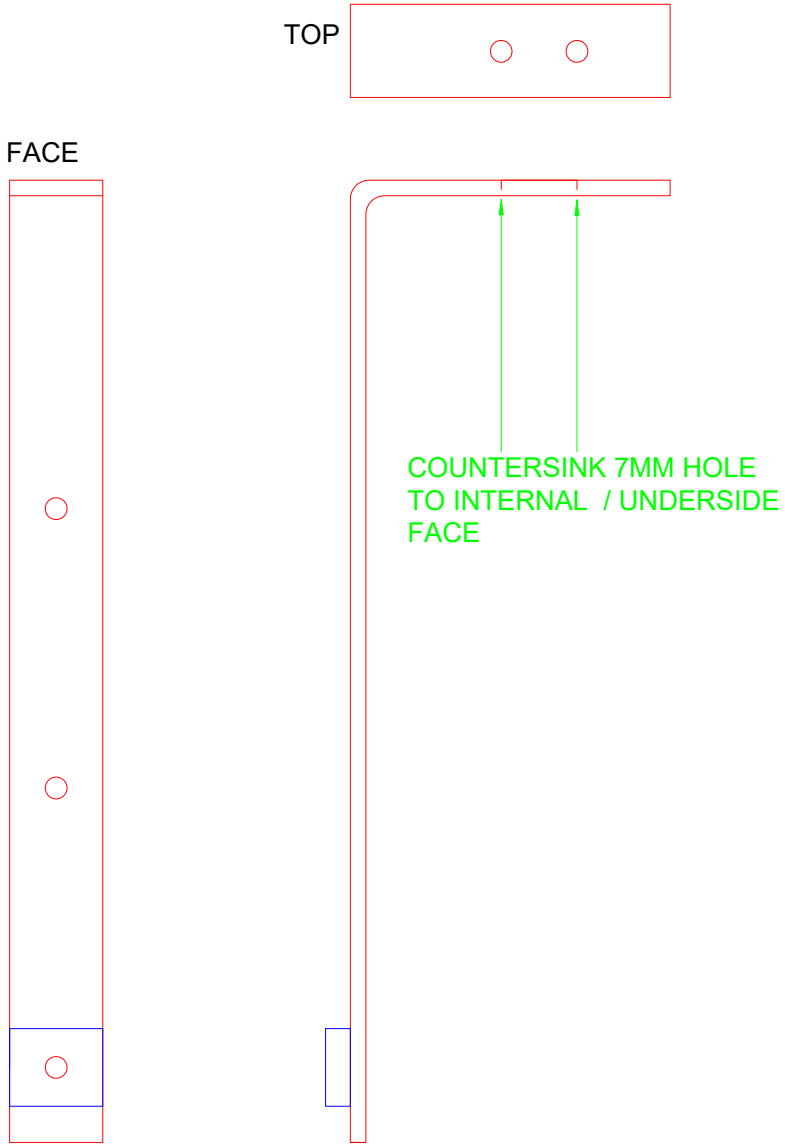

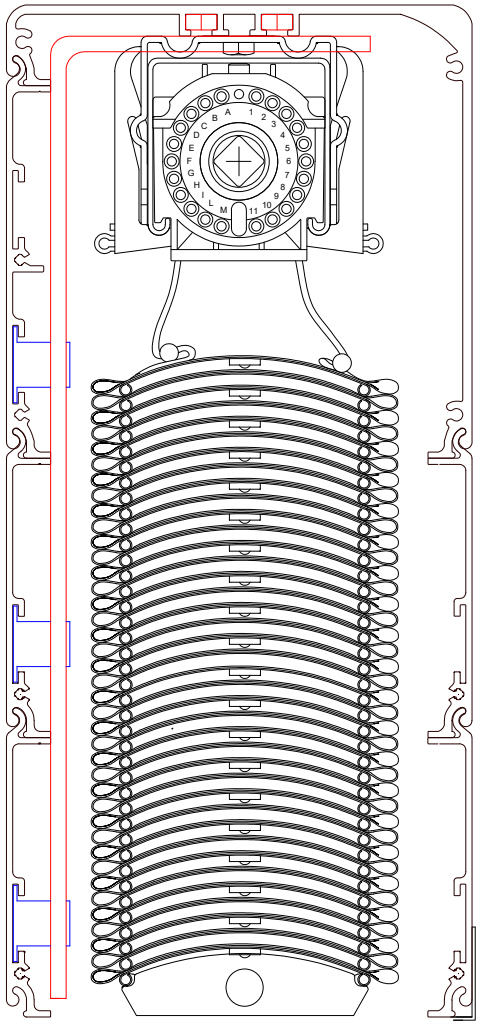

Recommended for use in face fix installation once pelmet width is greater than 3600mm

evaya

3.2d Pelmet Type B 386 - EV80

Conceal Retracted
Stack Height - 3800mm

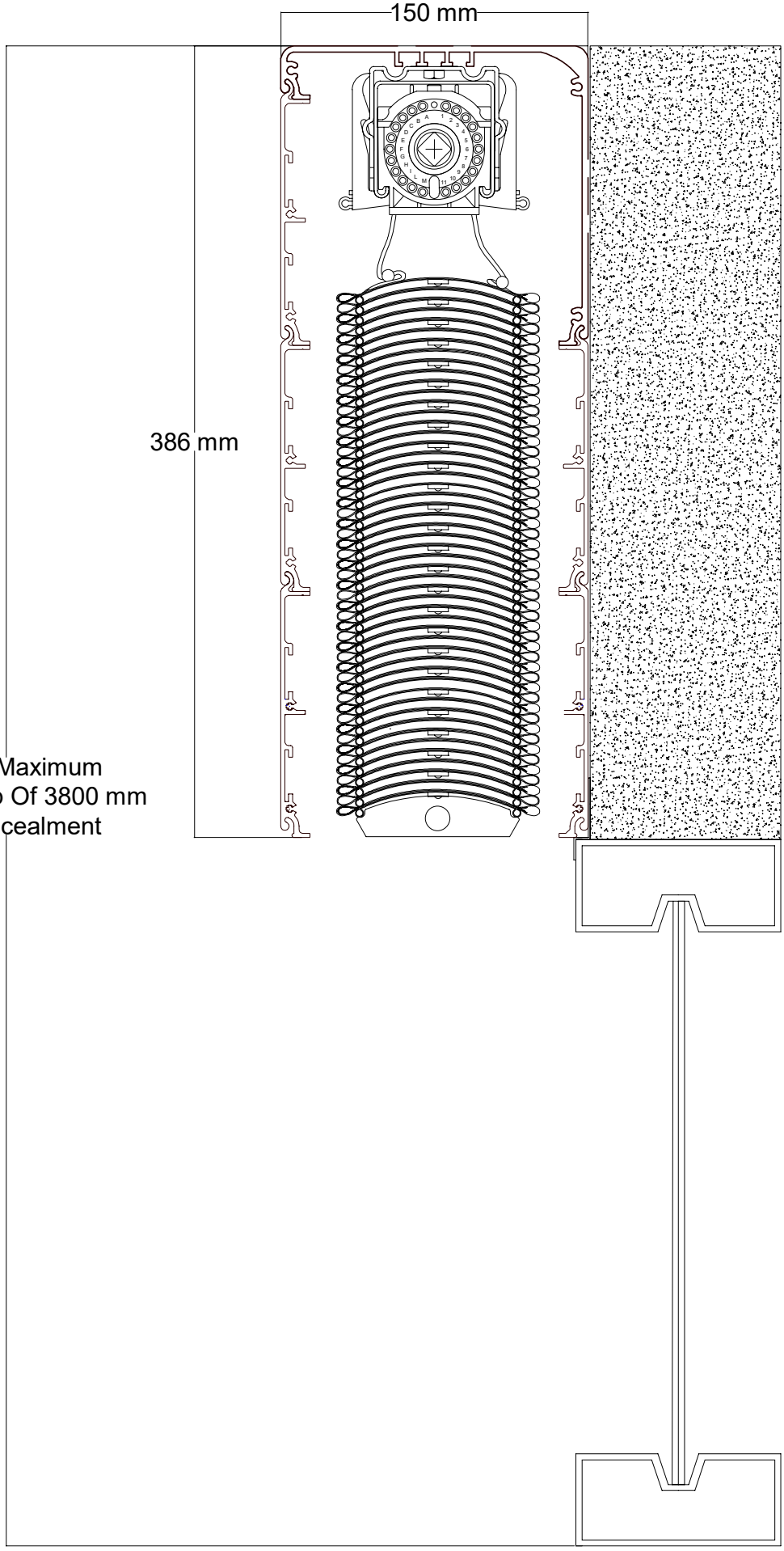

To Suit Maximum
Overall Drop Of 3800 mm
For Concealment

PELMET TYPE B 386
FASCIA BRACE

5MM STAINLESS STEEL
30MM WIDE

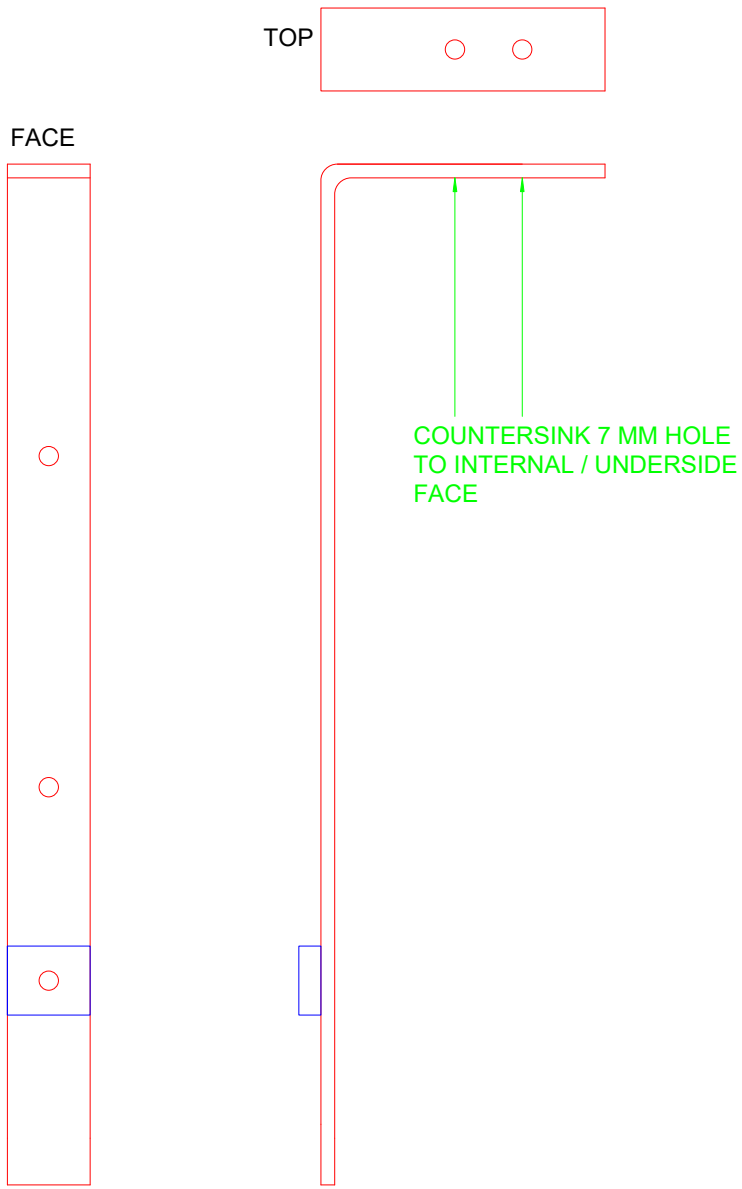

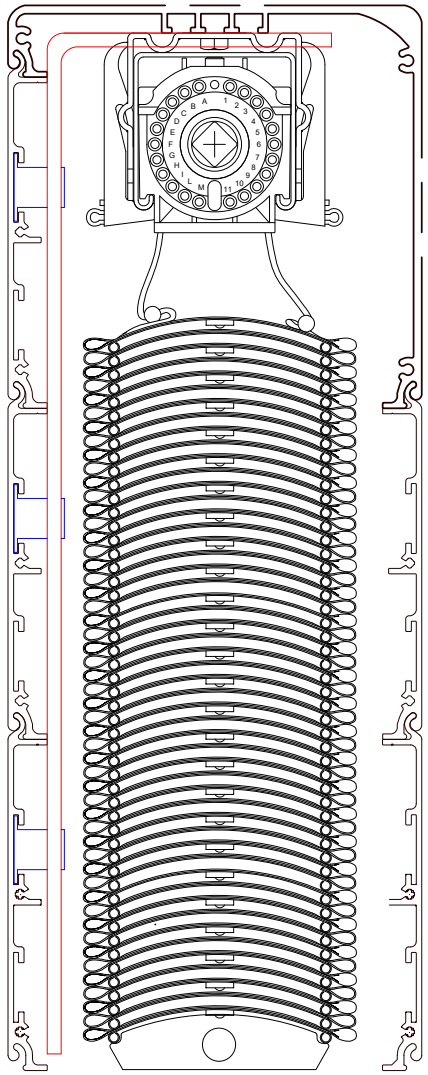

Recommended for use in face fix installation once width is greater than 3600mm

evaya

3.2f - Pelmet Fascia Panel Tab

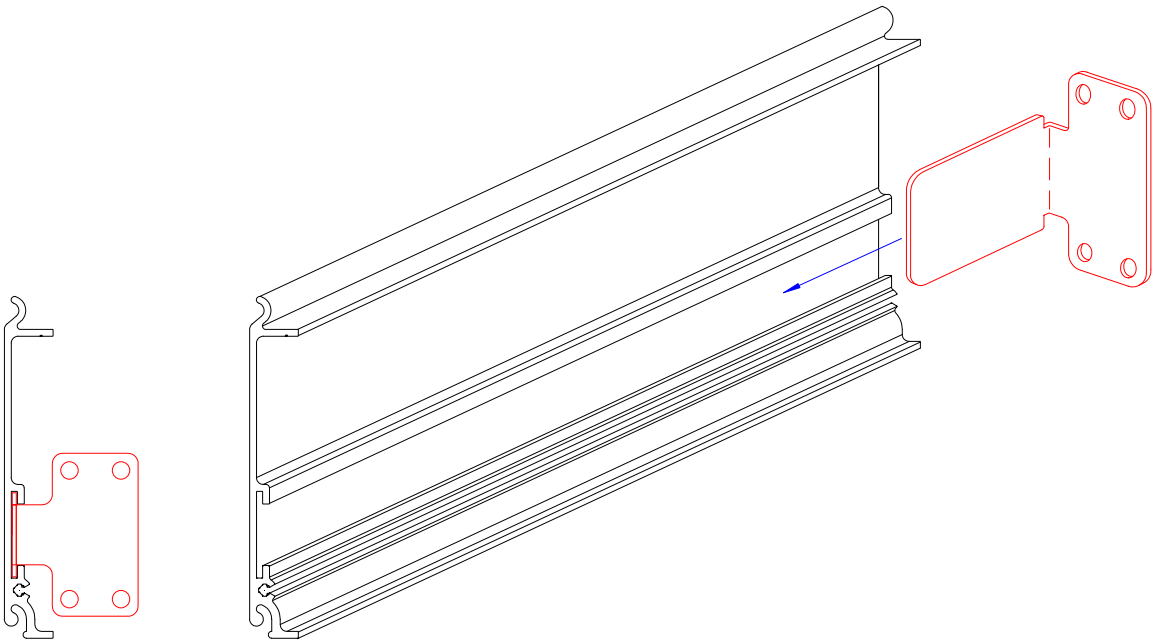

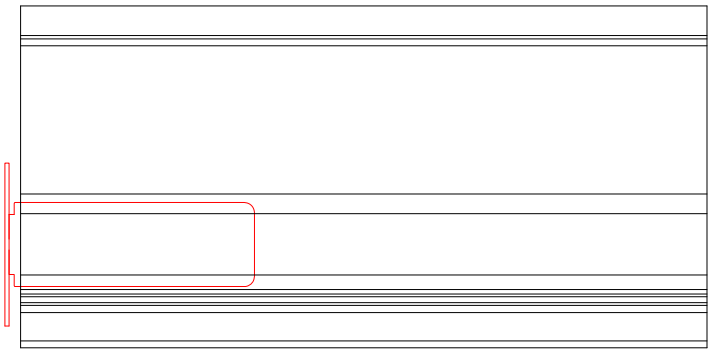

Slide fit with 60mm / 90mm / 120mm fascia panels.

Recommend for use when screw fixing of fascia panel through pelmet end cap is not possible

- Mechanically fasten sideways to pelmet end cap through holes as shown

OR

- Fix using adhesive compound

3.3 UNIVERSAL RECESS PELMET END CAP - WITH OVERLAY

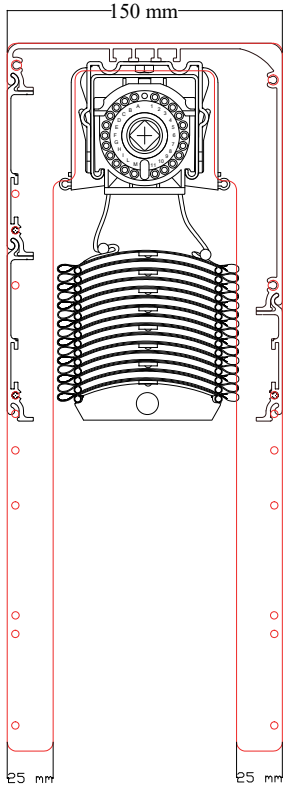

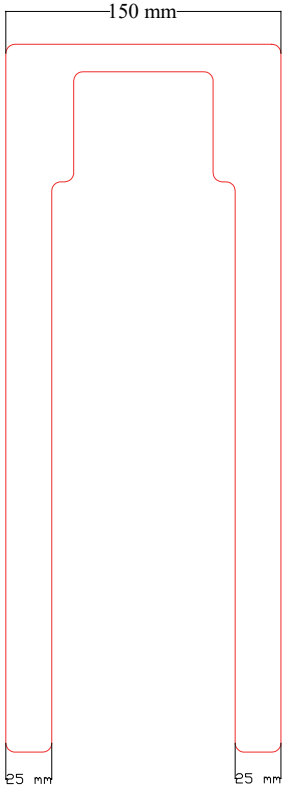

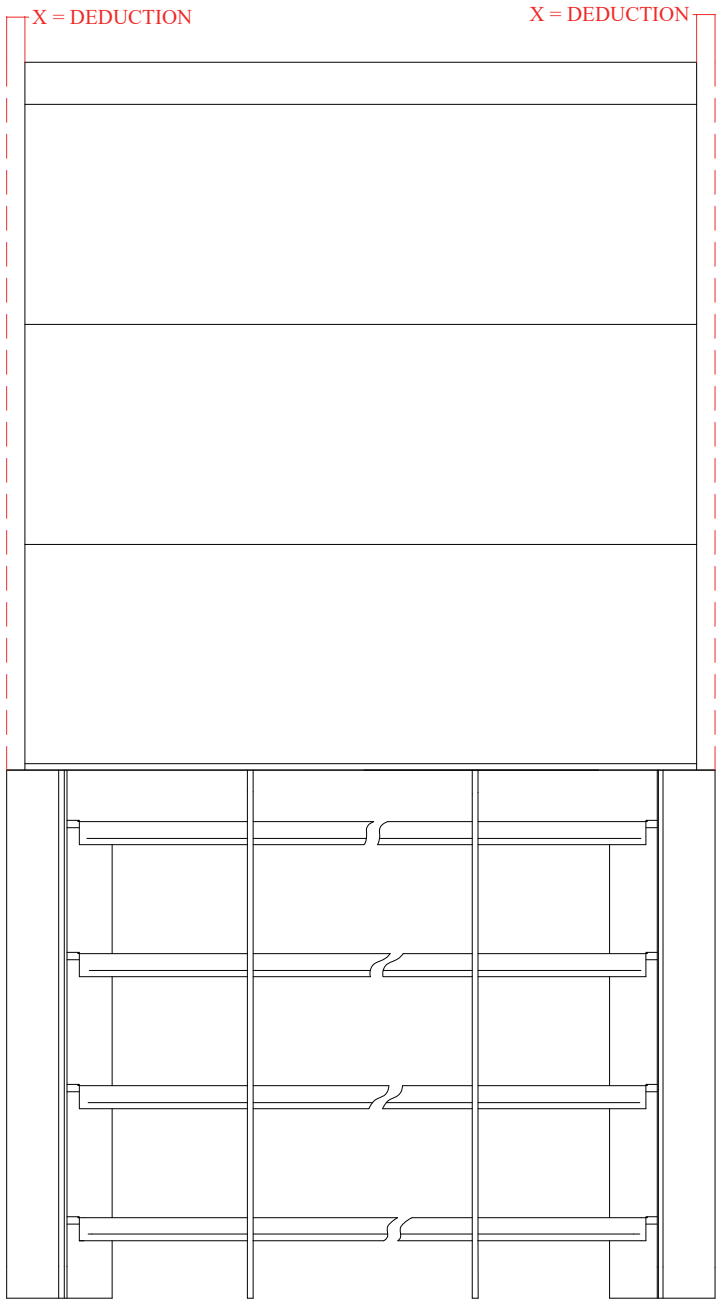

X = Variable deduction according to installation requirements.

The universal recess pelmet end cap allows for the pelmet to be produced to a narrower measurement when the installation is within a reveal.
The blind unit and side channels remain tight to the reveal.

Example - Shroud Installation
- Avoids damage to finished painted surface
- Avoids internal radius or welded corners

evaya

3.4 Type C Mounting Plate

Top Fix Plate for recess application.

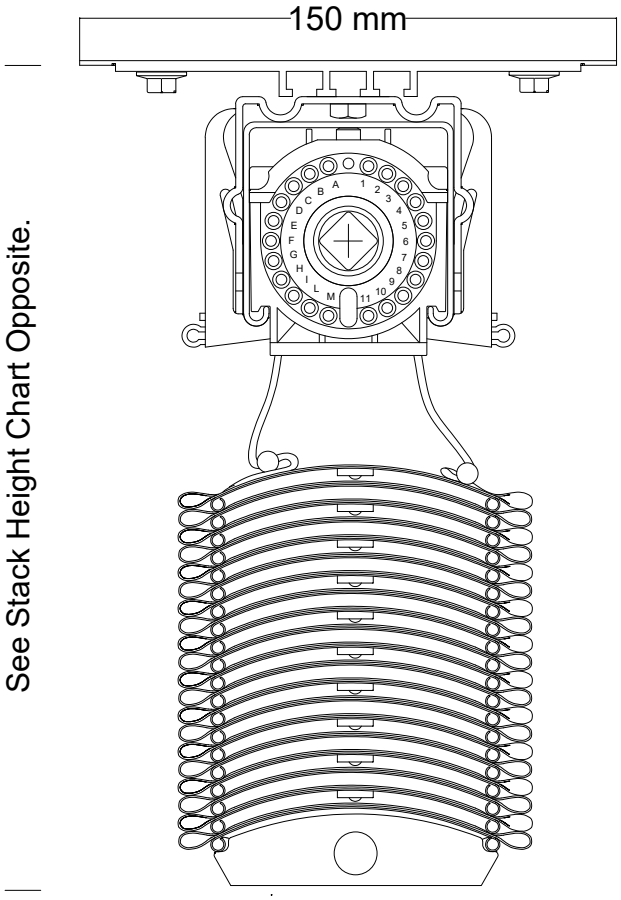

Architect / Builder responsible for design and construction of recess for EV80

OVERALL HEIGHT MM	STACK HEIGHT MM
1000	186
1250	203
1500	220
1750	237
2000	254
2250	271
2500	288
2750	305
3000	322
3250	339
3500	356
3750	373
4000	390

Stack height = Overall height

Overall height formula = Window height plus cavity height

Calculation example is as follows;

Window height = 2700mm

Proposed cavity height = 350mm

Total overall height = 3050mm

In the chart above, an overall height of 3250mm has a stack height of 339mm

Therefore, the proposed cavity height will fully conceal an overall height of 3050mm

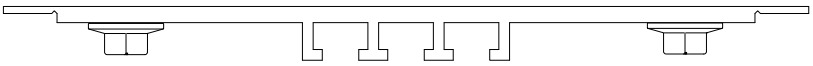

evaya

3.4a Type C Mounting Plate - EV80

Typical Construction Detail

Architect / Builder reponsible for design and construction of recess for EV80

OVERALL HEIGHT MM	STACK HEIGHT MM
1000	186
1250	203
1500	220
1750	237
2000	254
2250	271
2500	288
2750	305
3000	322
3250	339
3500	356
3750	373
4000	390

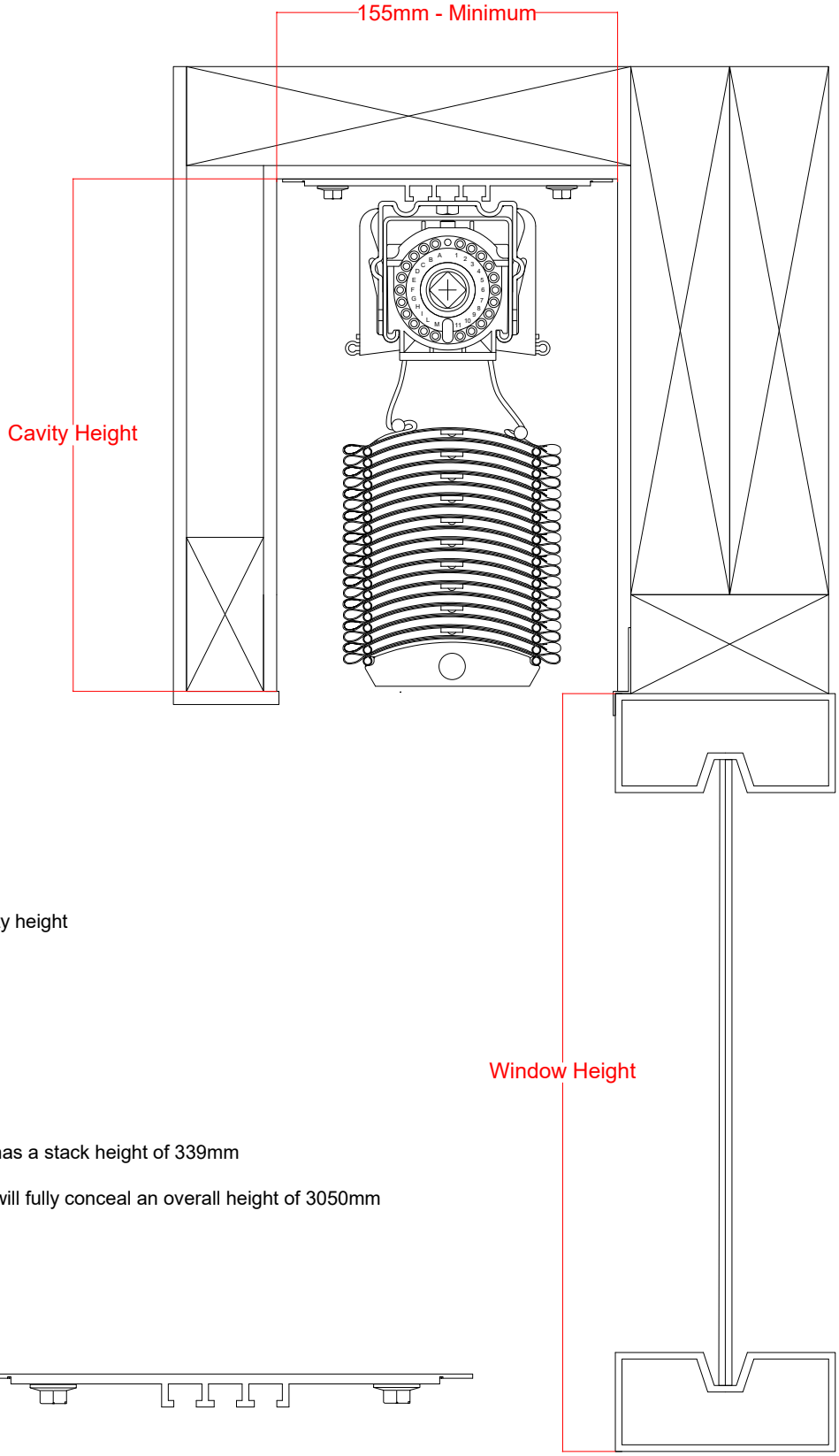

Stack height = Overall height

Overall height formula = Window height plus cavity height

Calculation example is as follows;

Window height = 2700mm

Proposed cavity height = 350mm

Total overall height = 3050mm

In the chart above, an overall height of 3250mm has a stack height of 339mm

Therefore, the proposed cavity height of 350mm will fully conceal an overall height of 3050mm

5.0 WIND SENSOR SHROUD

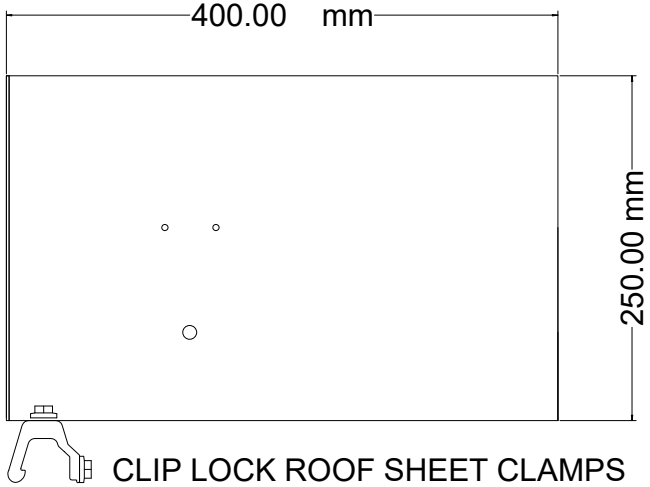

Shroud can be surface mounted or bolted to clip lock roof sheet when using roof clamps

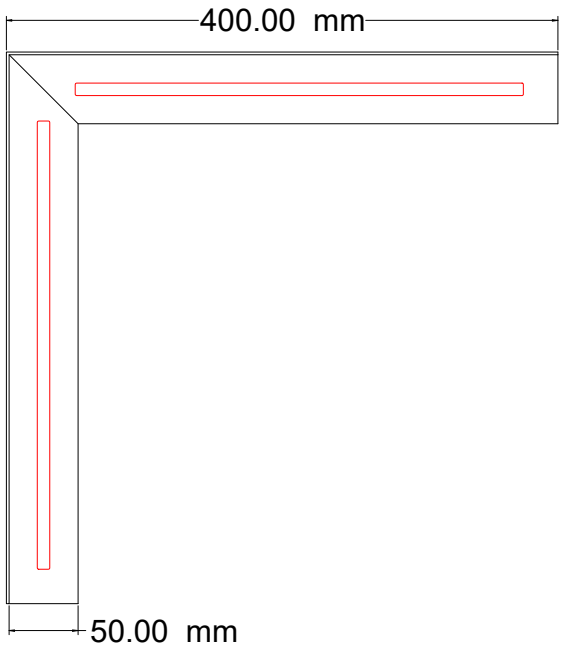

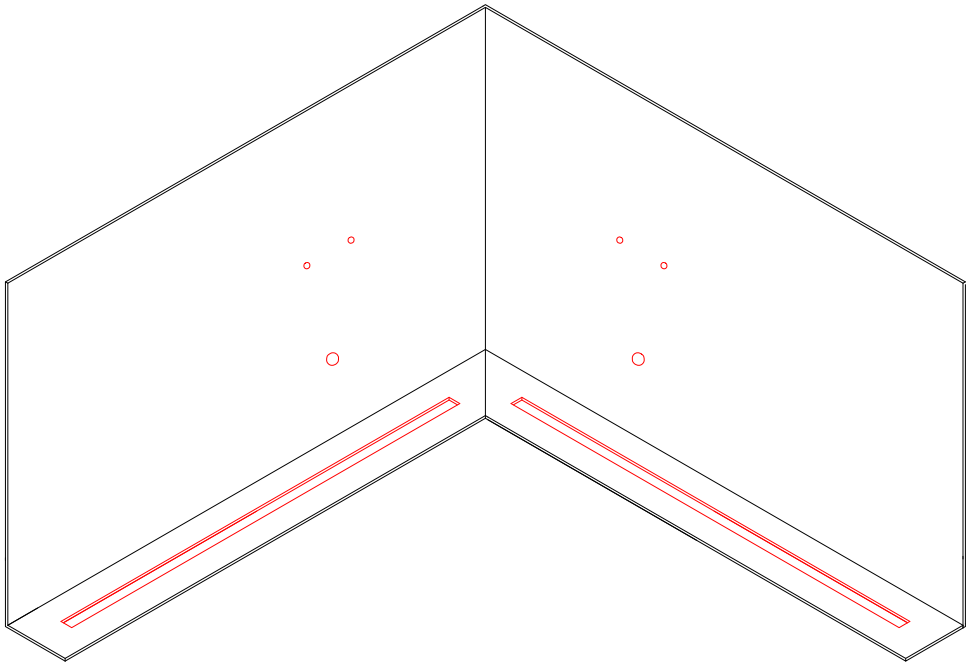

evaya

5.1 EV80 WEIGHT CHARTS

evaya

BLIND WEIGHT - KG

WIDTH - MM	1000	1500	2000	2500	3000	3500	4000	4500	5000
HEIGHT - MM									
1000	4	6	7	9	11	13	15	17	19
1500	5	7	9	11	14	16	18	20	23
2000	5	8	11	14	16	19	22	24	27
2500	6	9	13	16	19	22	25	28	31
3000	7	11	14	18	21	25	28	32	36
3500	8	12	16	20	24	28	32	36	40
4000	9	13	18	22	26	31	35	40	44
4500	10	14	19	24	29	34	39	43	48
5000	11	16	21	26	32	37	42	47	53

PELMET TYPE B WEIGHT - KG

WIDTH - MM	1000	1500	2000	2500	3000	3500	4000	4500	5000
WEIGHT	3.4	5.0	6.7	8.4	10.1	11.7	13.4	15.1	16.8

PELMET TYPE B FRONT FASCIA COMBINATION WEIGHT - KG

WIDTH - MM	1000	1500	2000	2500	3000	3500	4000	4500	5000
COMBINATION A	2.1	3.2	4.2	5.3	6.3	7.4	8.4	9.5	10.5
COMBINATION B	2.4	3.6	4.8	6.0	7.2	8.4	9.6	10.8	12.0
COMBINATION C	3.0	4.5	6.0	7.5	9.0	10.5	12.0	13.5	15.0
COMBINATION D	3.6	5.4	7.2	9.0	10.8	12.6	14.4	16.2	18.0

PELMET TYPE B REAR FASCIA COMBINATION WEIGHT - KG

WIDTH - MM	1000	1500	2000	2500	3000	3500	4000	4500	5000
COMBINATION A	0.9	1.4	1.8	2.3	2.7	3.2	3.6	4.1	4.5
COMBINATION B	1.2	1.8	2.4	3.0	3.6	4.2	4.8	5.4	6.0
COMBINATION C	1.8	2.7	3.6	4.5	5.4	6.3	7.2	8.1	9.0
COMBINATION D	2.4	3.6	4.8	6.0	7.2	8.4	9.6	10.8	12.0

SIDE CHANNEL WEIGHT - KG

DROP - MM	1000	1500	2000	2500	3000	3500	4000	4500	5000
TYPE A	0.4	0.6	0.9	1.1	1.3	1.5	1.7	1.9	2.2
TYPE B	0.4	0.6	0.9	1.1	1.3	1.5	1.7	1.9	2.2
TYPE C	1.6	2.4	3.2	4.1	4.9	5.7	6.5	7.3	8.1
TYPE D	1.5	2.2	3.0	3.7	4.4	5.2	5.9	6.7	7.4

PELMET TYPE C WEIGHT - KG

WIDTH - MM	1000	1500	2000	2500	3000	3500	4000	4500	5000
WEIGHT	1.4	2.1	2.8	3.5	4.2	4.9	5.6	6.3	7.0

6.1 EV80 Section Blade Angles - Pelmet Type A 206

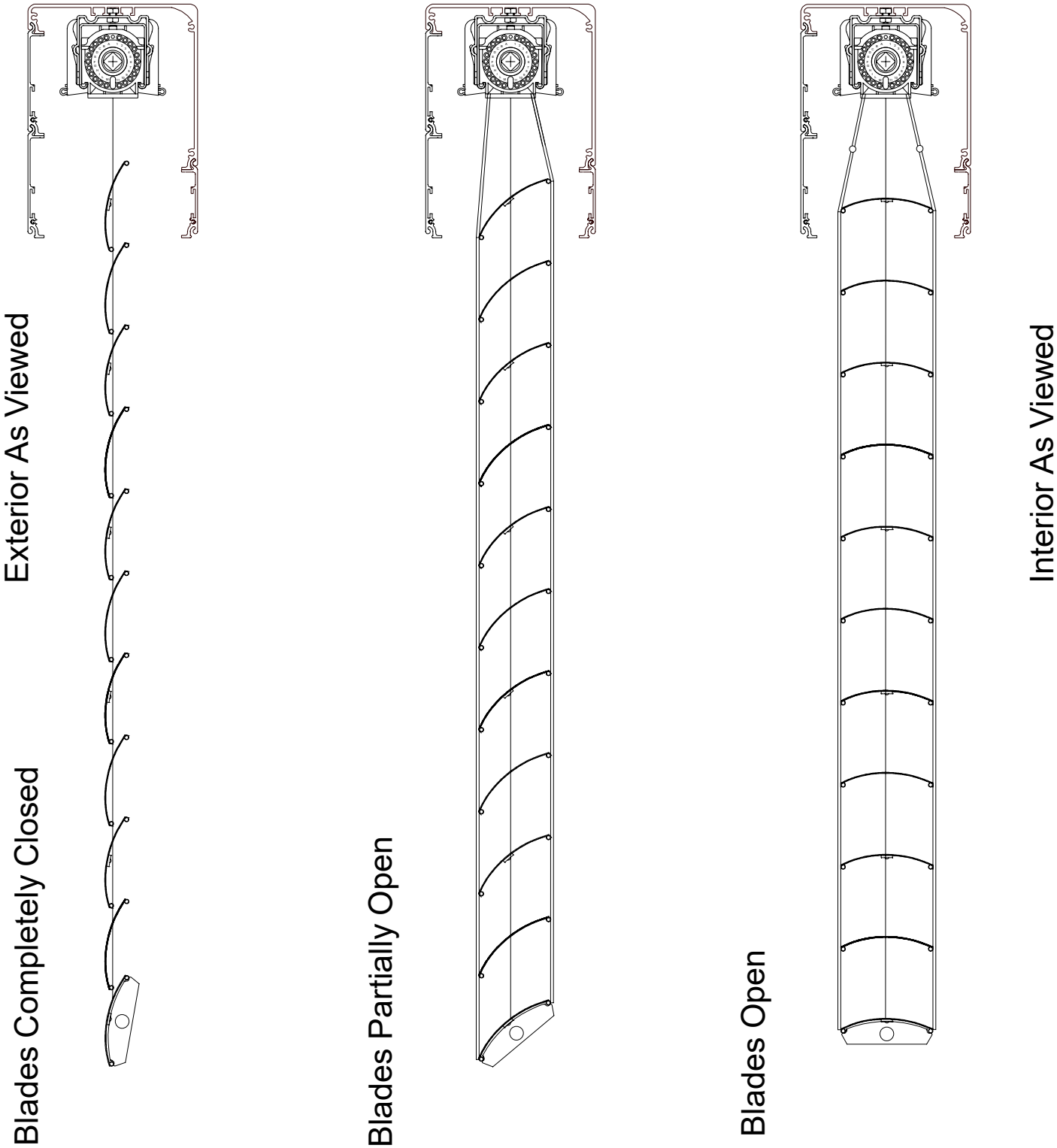

evaya

6.2 EV80 Section Blade Angles - Pelmet Type B 236

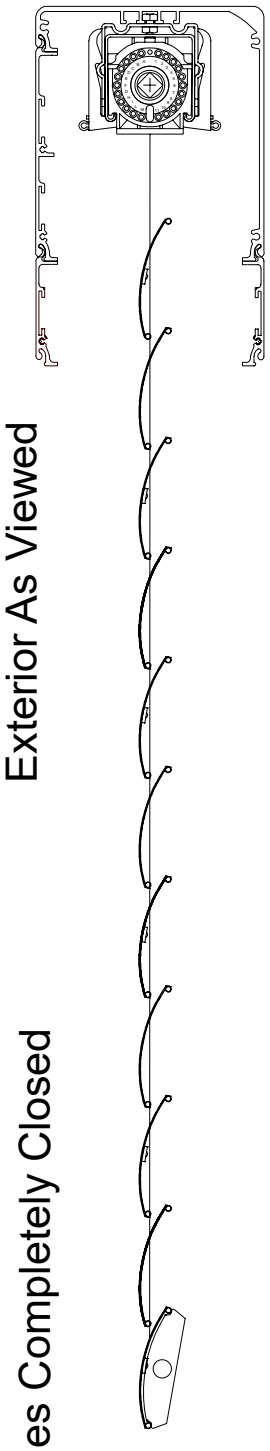

Blades Completely Closed

Exterior As Viewed

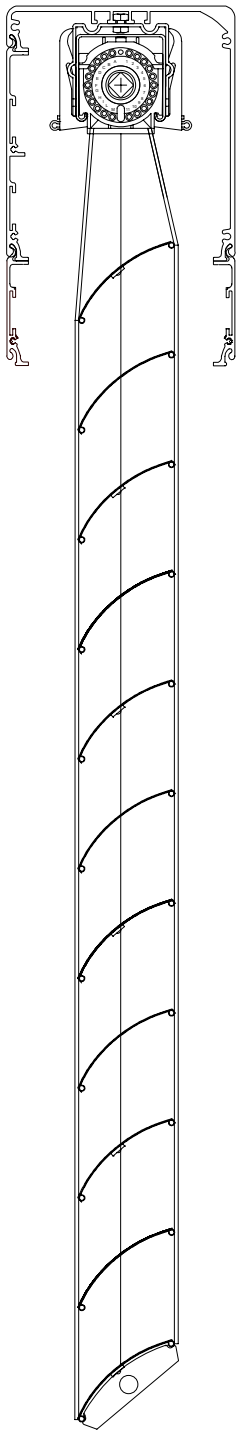

Blades Partially Open

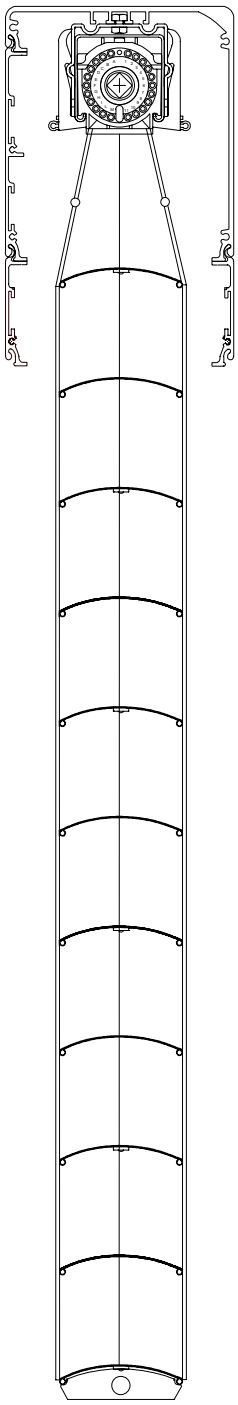

Blades Open

Interior As Viewed

evaya

6.3 EV80 Section Blade Angles - Pelmet Type B 266

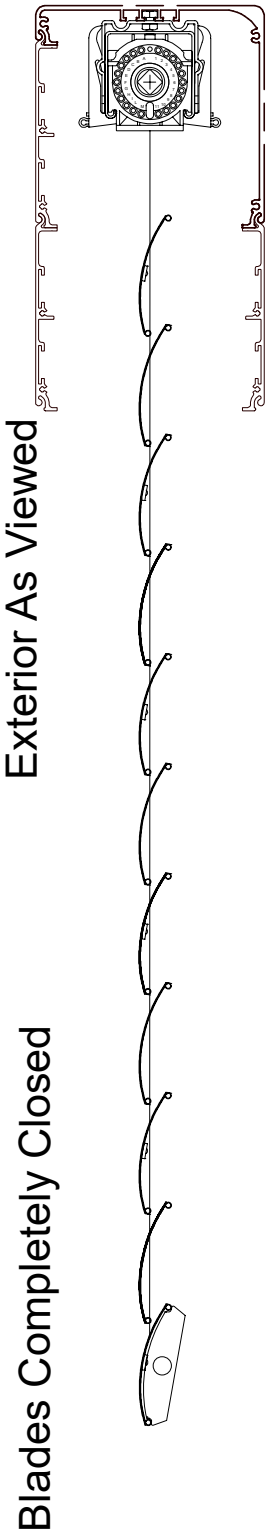

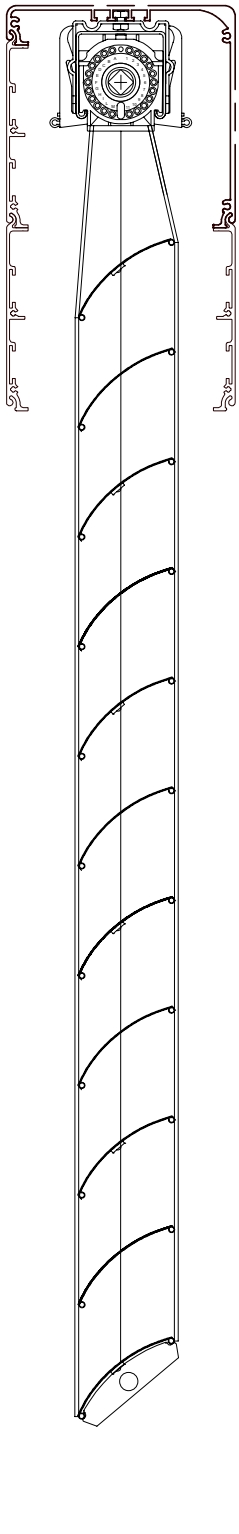

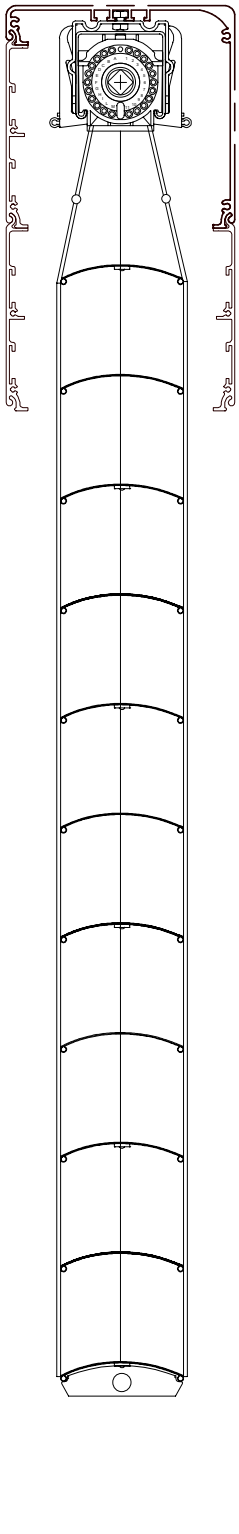

evaya

6.4 EV80 Section Blade Angles - Pelmet Type B 326

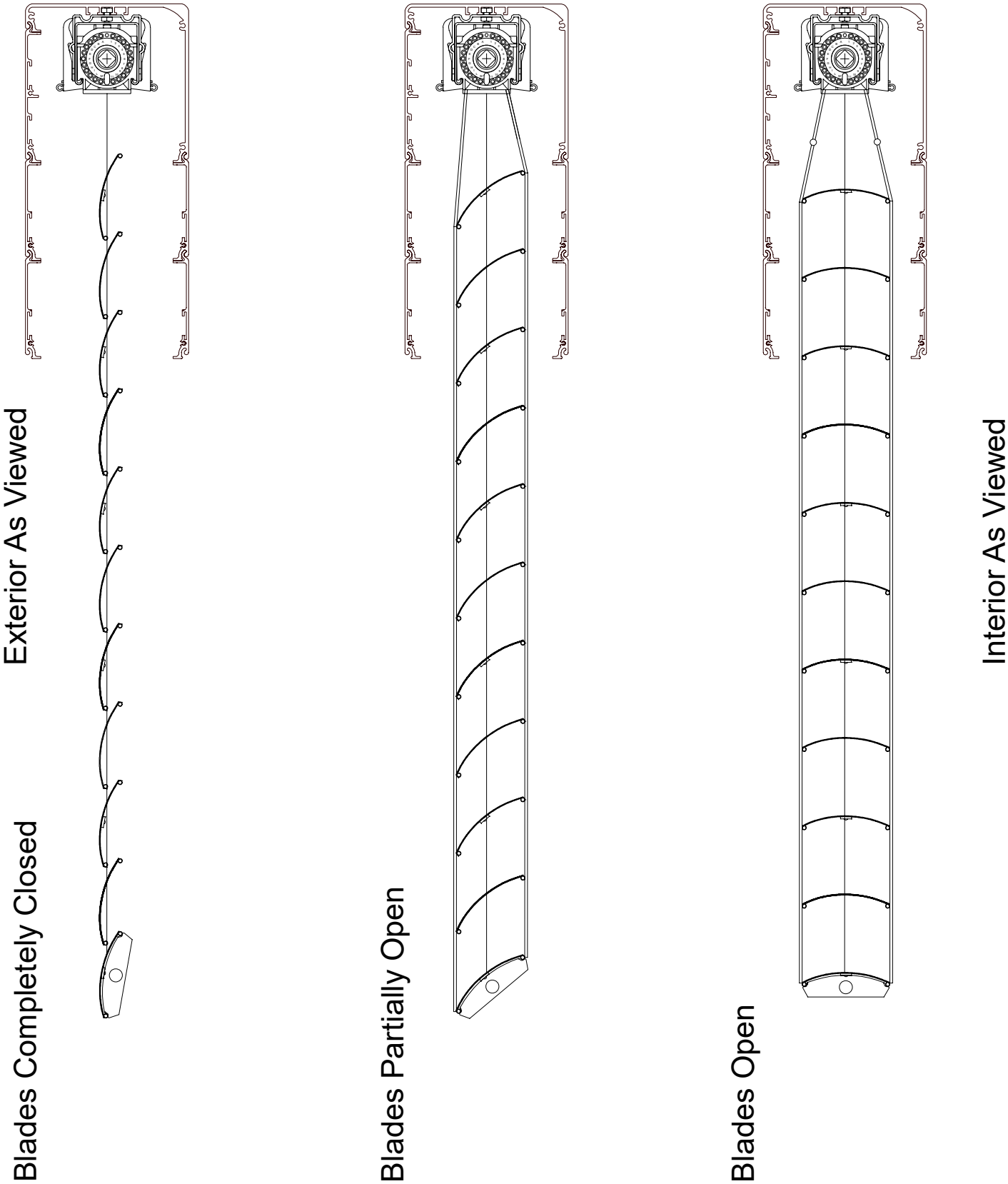

6.5 EV80 Section Blade Angles - Pelmet Type B 386

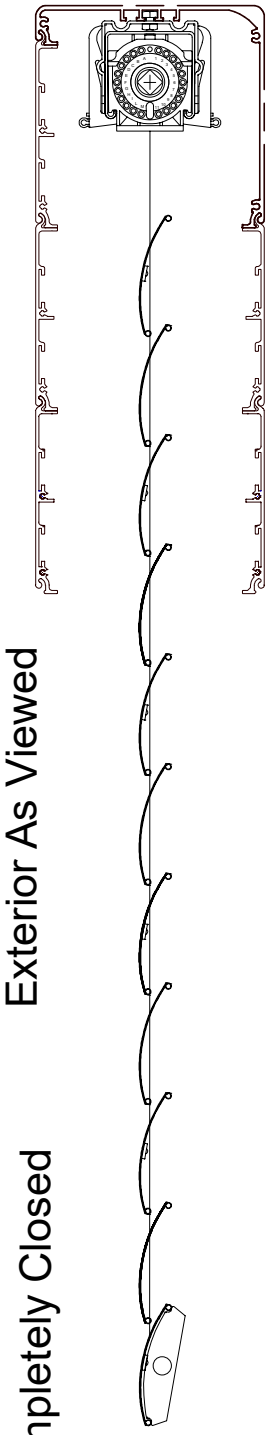

Blades Completely Closed

Exterior As Viewed

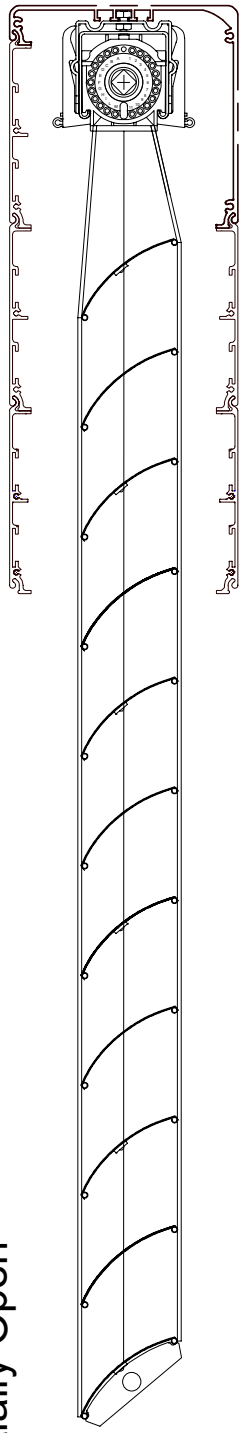

Blades Partially Open

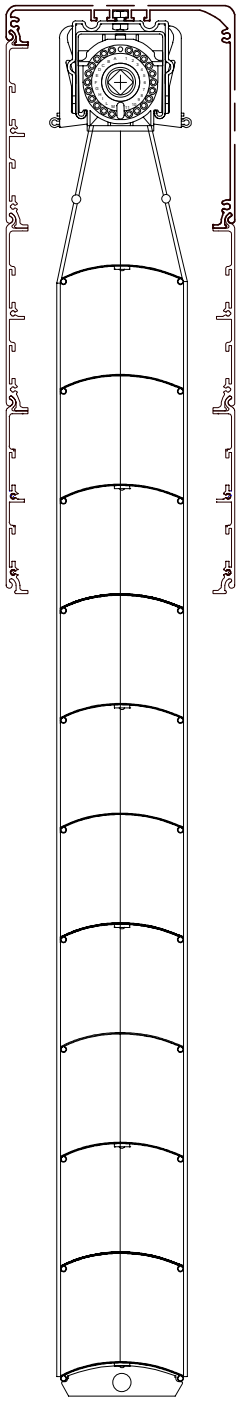

Blades Open

Interior As Viewed

evaya

6.6 EV80 Section Blade Angles - Type C Mounting Plate

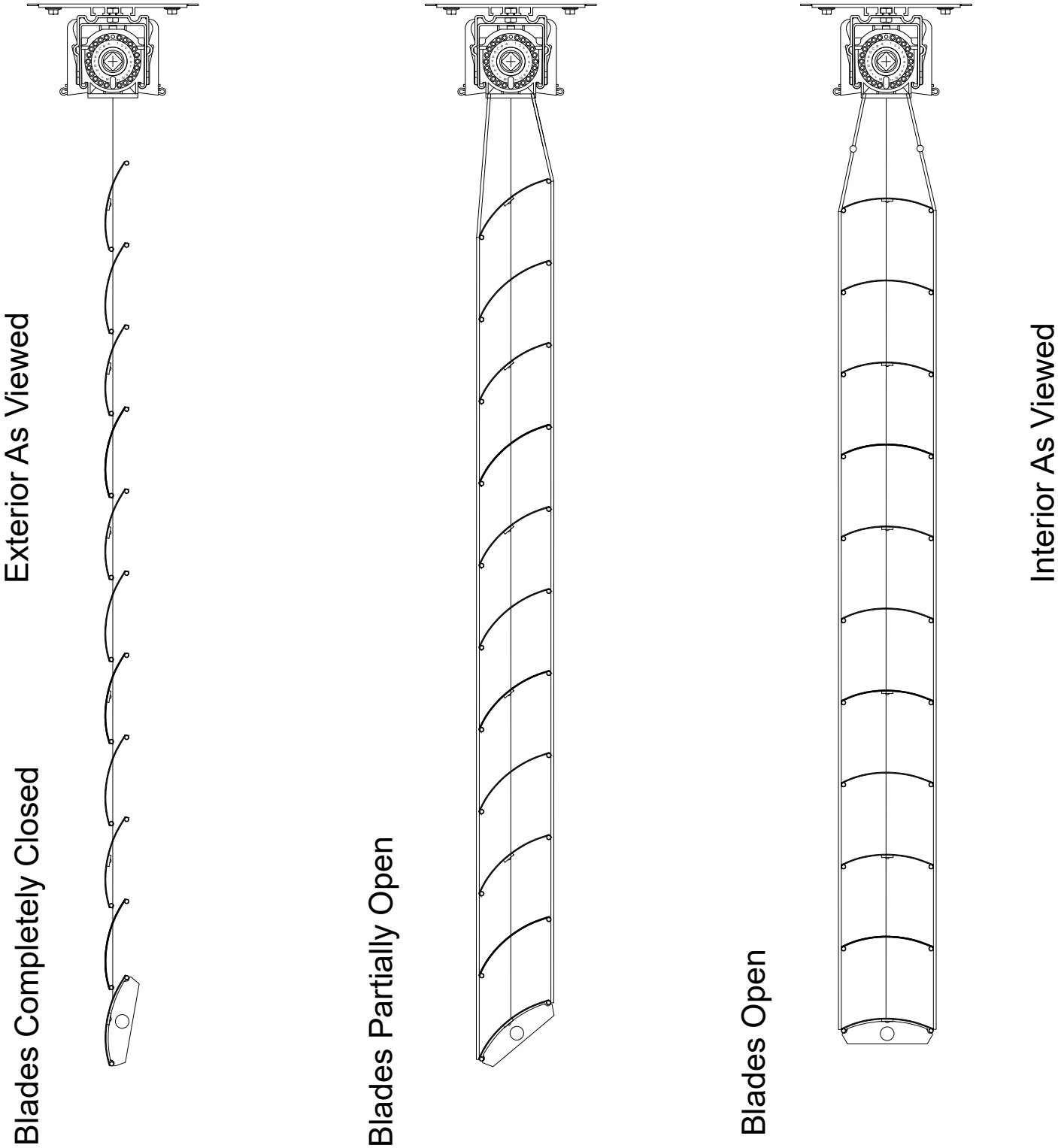

evaya

evaya

evaya
t: (03) 5986 2183
e: sales@evaya.com.au
w: evaya.com.au

June 2023