Paraflex

Unique Wall Mounted Umbrella

Create the shade where you want, independent of the sun's position.

- The only umbrella designed specifically for wall-mounting
- Easy to open and close
- Removable in seconds with easy "lift-lock" bracket
- Ultra light aluminium frame
- Post mounting options also available
- Install 1, 2 or 5 canopies on one central post

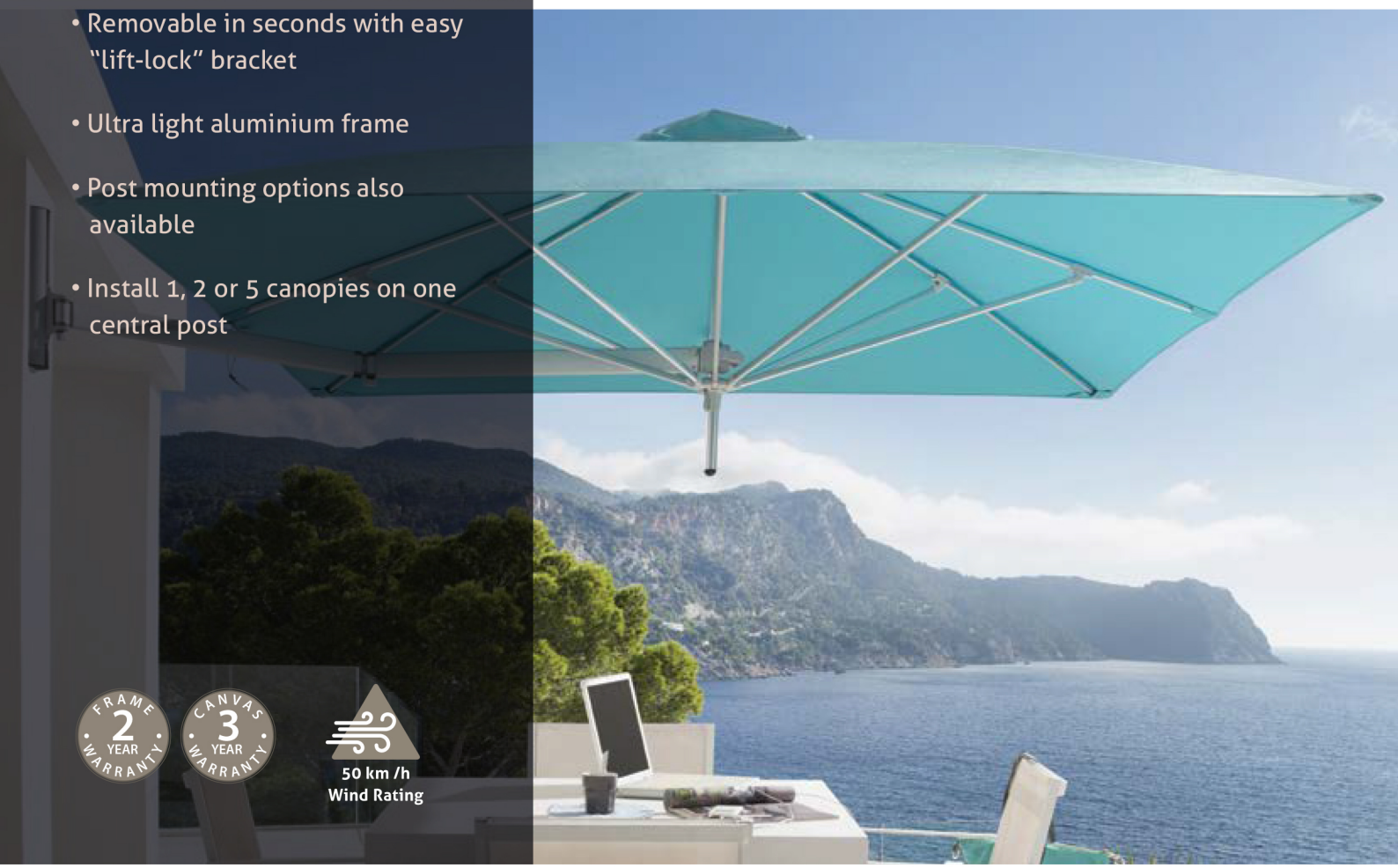

FRAME 2 YEAR WARRANTY

CANVAS 3 YEAR WARRANTY

50 km /h Wind Rating

instaco™ Shade & Outdoor Solutions

Instaco Pty Ltd as trustee for Instaco Group
ABN 21 876 208 774 ACN 142 762 141

BSA Licence no 1203267

P 07 3277 7749
E sales@instaco.com.au

www.instaco.com.au

Office/ Showroom
Unit 2/8 Boyland Avenue
Coopers Plains 4108
PO Box 1180
Sunnybank Hills 4109

Paraflex

The unique Paraflex wall mount system removes the need for a heavy base and central pole, and is perfect for 'tight' areas. The flexible arms and tilting canopy allow you to create the shade where you want, independent of the sun's position. Paraflex has a modern design and is very easy to use.

Umbrella Open

Umbrella Closed

Evolution Arm

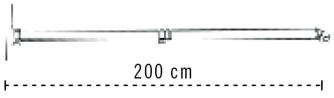

Protective Cover

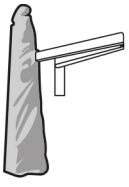

Dimensions

1.9m Sq | 2.7m Hex | 3m Hex

Colours

Black | Smoked Tweed | Slate | Tan | Natural

Canopies are made of water repellant and UV-resistant 100% Solution Dyed Olefin Canvas (three year warranty against fading) and come in a variety of stylish colours.

*Fabric colours may vary slightly from printed swatches shown above.

Pole Mounting Options

Spigot

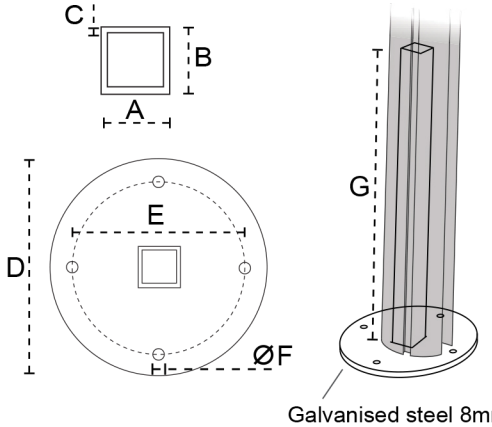

Galvanised steel 8mm/0.3"

Single Pole

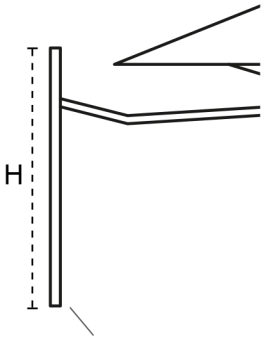

Multi Pole

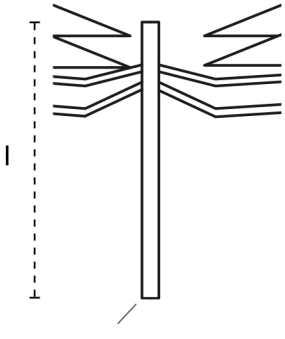

Extruded Aluminium Alloy 6060, naturally anodised

	A	B	C	D	E	F	G	H	I min	I max
Spigot Dimensions	40cm	40cm	3cm	215cm	170cm	11cm	490cm	220cm	215cm	240cm

instaco™ Shade & Outdoor Solutions

Instaco Pty Ltd as trustee for Instaco Group
ABN 21 876 208 774 ACN 142 762 141
BSA Licence no 1203267

P 07 3277 7749
E sales@instaco.com.au
www.instaco.com.au

Office/ Showroom
Unit 2/8 Boyland Avenue
Coopers Plains 4108
PO Box 1180
Sunnybank Hills 4109