Issey Sun Shade Systems
Introducing the MaxiZip Series

This MaxiZip is the premium sunshade for conservatories and patios. This system is designed to withstand high wind areas. The main feature of this product is that the fabric is locked into the track by the means of a zip. That means with the MaxiZip flapping of fabric is a thing of the past. The tensioning device is located inside the tracks.

issey
live better

The Issey MaxiZip Series

In these series the MaxiZip & the MaxiZip Pergo with the optional extension of the Vario-Valence, makes these systems very flexible and adaptable to the site installation requirements and customised to your design and taste.

The robust design can make the system most suitable for high wind and coastal areas that is aesthetic and compact in looks

Important sizes and measurements

Maxizip

Ceiling Fit Installation

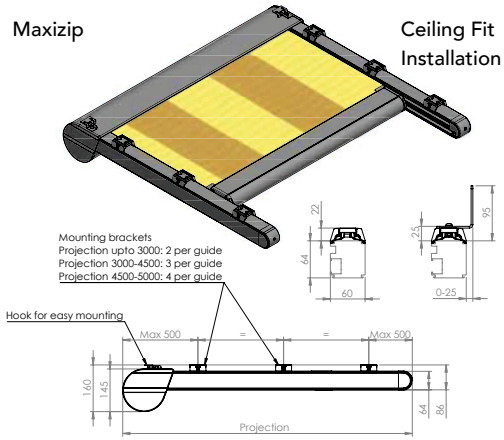

Maxizip

Face Fit Installation

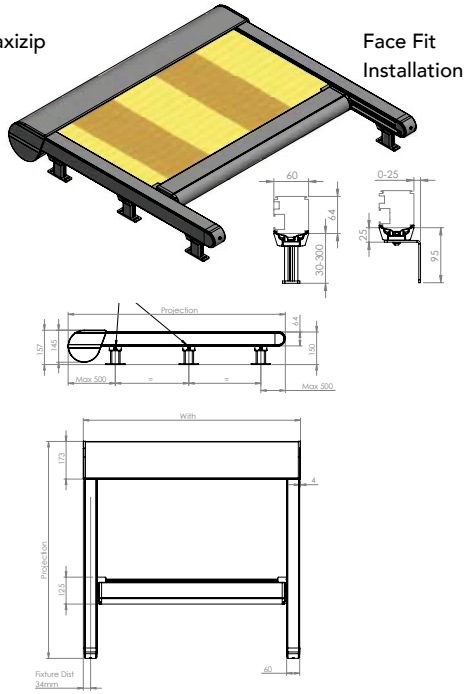

APPLICATIONS - MAXIZIP

- Sunroom
- Large Skylight
- Pergola
- Greenhouse

APPLICATIONS – MAXIZIP PERGO & DELITE

- Alfresco Open Area
- Patios
- Courtyard
- Semi Open Spaces

FEATURES

- Tensioned fabric to minimise flapping in the wind
- Guided fixed track for minimalist appearance
- Motorised for simple operation
- Full automation and smart-home options are available
- Sleek, elegant design blends works with any décor
- Over 200 colours available
- Designer graphic options

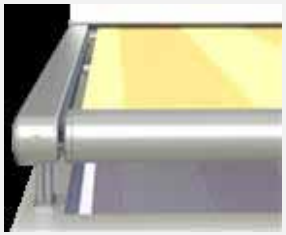

The MaxiZip offers the possibility to install on top or underneath the frame. If necessary the MaxiZip can be fitted with a blackout fabric, when total darkness is required. It can be fitted with Screen or Arcylic fabric for effective heat reflection and maximum filtration of sun's light. The integrated gutter is incorporated in the bottom bar for the flow of rain water (an inclination of 15 degrees is required).

Important sizes and measurements

Maxizip Pergo

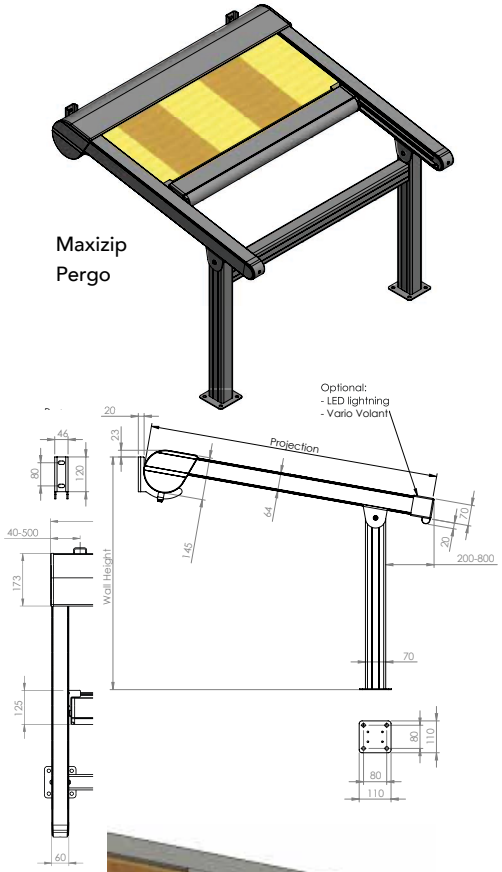

Maxizip Delite

-LED Lighting
-Vario Valance

Our Confidence in this series of MaxiZip has been demonstrated with our team standing & jumping on the system

The multi-functional and versatility of the Issey MaxiZip is easily adaptable with any architectural style thanks to its availability in various customisation options, making this Issey Systems one of our most Innovative Protégé thus far.

issey
live better

Issey helps you to create comfort and lifestyle choices by providing your home & business with Sun Shade Systems that extend and protect you and your family from the scorching sun

For 25 years Issey developed stylish and sophisticated system that can be tailored to your design, and customize to your taste. Our European components, combined with local design, manufacture and installation provide the "best of both worlds" in function and form.

This Issey MaxiZip is the premium sunshade for conservatories, pergola and patios.

- The robust MaxiZip is designed to withstand high wind areas, and with the adaptability of the systems, it stretches your mind and the design is limitless.
- The multi-functional of the Issey MaxiZip fits in with any architectural style.
- With the locking zip device incorporated into the track system, flapping of the fabric is a thing of the past.

- The **Issey MaxiZip Pergo** is a freestanding design, where the head box is installed against a support structure; the tracks are the supported columns, either at the end or before the end to create an overhang.
- The front bar can be incorporated with gutters to manage the follow of rain water. This system is perfect for retro-fitting.
- As an option, the integrated **Issey MaxiZip Pergo Vario-Valance** is located at the end of the track and can be incorporated effectively, blocking the low sun.
- Optional LED lighting can be fitted for evening entertainment.

MaxiZip Pergo Vario-Valence

instaco™
Shade & Outdoor Solutions

Instaco Pty Ltd as trustee for Instaco Group
ABN 21 876 208 774 ACN 142 762 141

BSA Licence no 1203267

P 07 3277 7749
E sales@instaco.com.au

www.instaco.com.au

Office/ Showroom
Unit 2/8 Boyland Avenue
Coopers Plains 4108
PO Box 1180
Sunnybank Hills 4109

issey
live better